1. MECHANICAL DIMENSIONS :

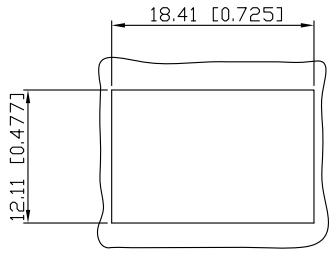

RECOMMENDED
PANEL CUTOUT DIMENSION

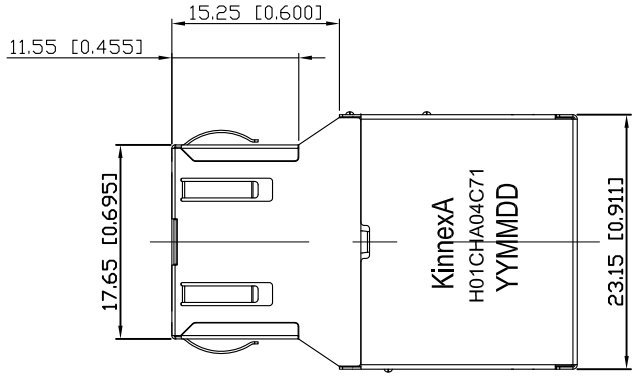

NOTES:
1. MATERIAL:
   HOUSING-LCP UL-94V-0 MIXED GLASS
   FIBER, STANDARD COLOR-BLACK
   CONTACTS- 0.35mm THICK PHOS-BRONZE PLATED
   WITH 30u" GOLD UNDERPLATED 50u" NICKEL;
   0.45mm DIA. PHOS-BRONZE PLATED
   WITH GOLD FLASH IN SOLDER AREA.
   SHIELD - 0.20mm THICK COPPER ALLOY, PLATED WITH NICKEL.
   LIGHT PIPE- POLYCARBONATE
2. OPERATING TEMPERATURE : -40°C~+85°C
3. CAVITY CONFORMS TO FCC RULES AND REGULATIONS
   PART 68, SUBPART F.
4. PEAK SOLDERING TEMPRATURE IS 260°C MAX, 10 SECONDS MAX,
   FOR WAVE SOLDERING PROCESS.
5. UNSPECIFIED TOLERANCE: .XX ±0.25[0.010]

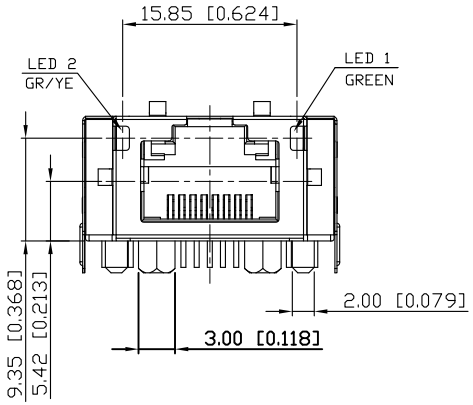

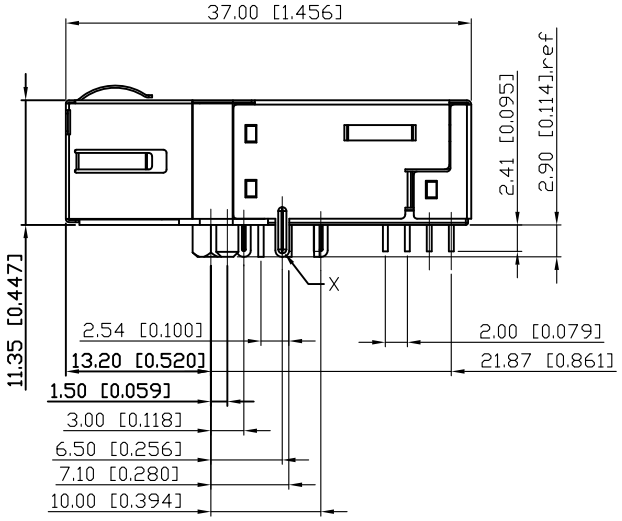

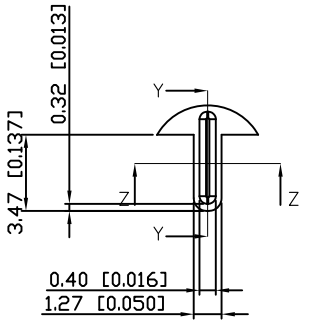

DETAIT:X
2:1

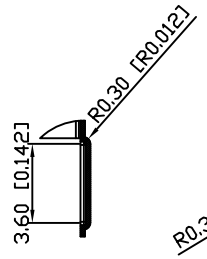

SECTION Y-Y
SCALE 1:1

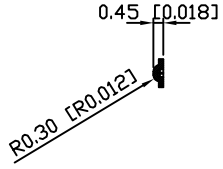

SECTION Z-Z
SCALE 1:1

RECOMMENDED PLUG DIMENSION:

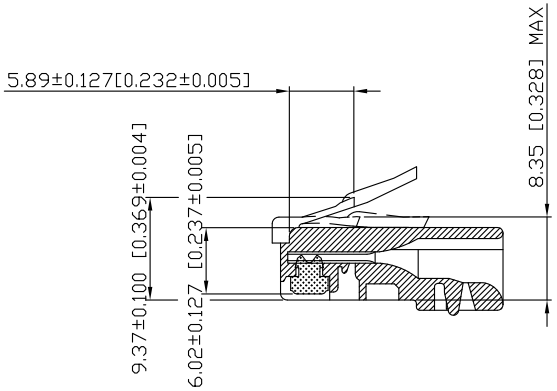

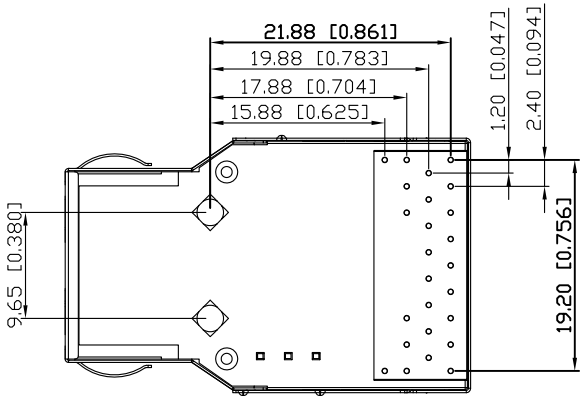

RoHS Compliant

KinnexA

KINNEXA, INC.
4F, No. 347,Yang Guang St.,
Neihu , Taipei , Taiwan 11491

THIS DRAWING IS A CONTROLLED DOCUMENT.

TITLE:	RJ45, WITH LED, with 10/100/1000 Magnetics and PHY 8P,25C, Shielded, Thru Hole.
PART NO:	KRH-01C-H-A04-C71-HA1
DWG NO:	KRH-01C-H-A04-C71-HA1
DRAWN:	IVAN
CHKD:	LEO
DATE:	JUL.25,13

UNIT	SHEET	REV
mm[inch]	1 of 4	01

2. PCB LAYOUT :

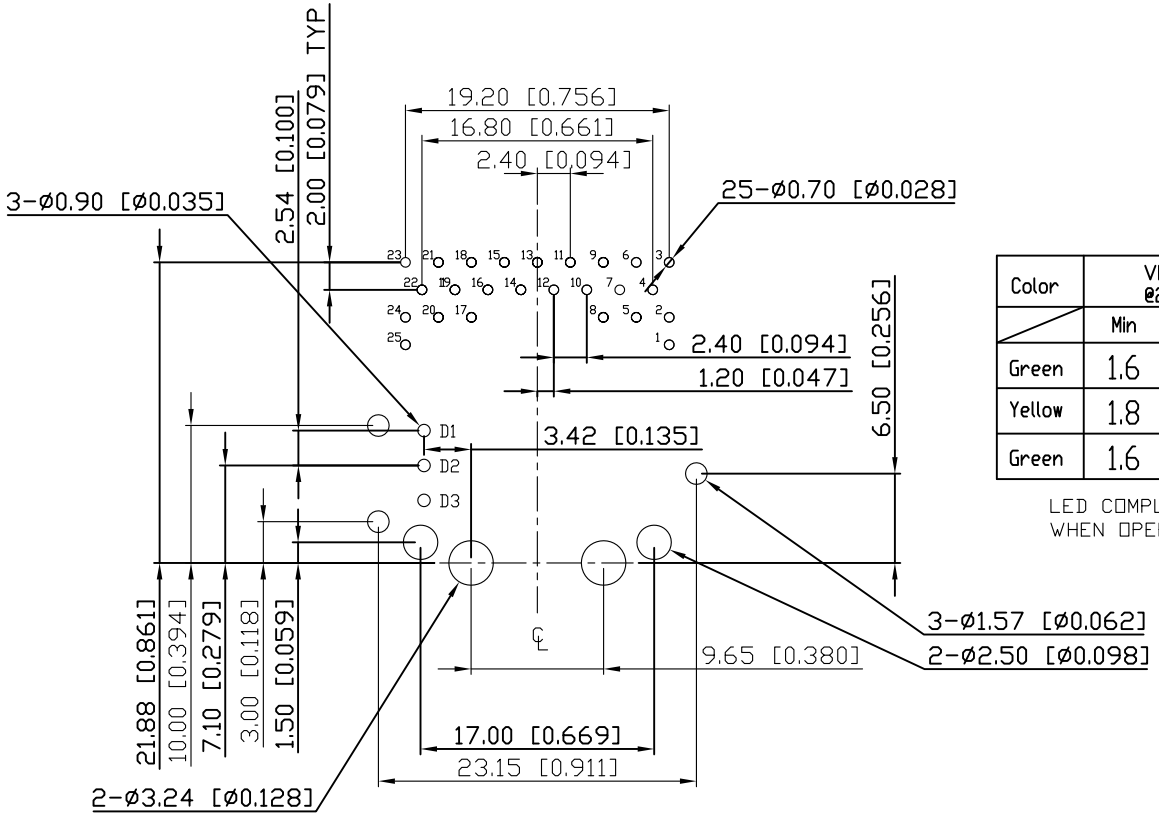

SUGGESTED PCB LAYOUT
(TOP VIEW)
DIMENSIONAL TOLERANCE: .XX ±0.08[0.003]

3. LED CONFIGURATION :

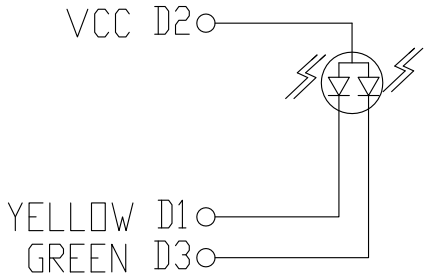

Color	VF(V) @20mA		IV(mcd) @20mA		Viewing Angle(Deg) $2\theta_{1/2}$	IF(mA)	Peak wave Length λP(nm) @20mA
	Min	Max	Min	Typ	Typ	Max	Typ
Green	1.6	2.6	1	3	140	30	565
Yellow	1.8	2.6	1	3	140	30	592
Green	1.6	2.5	30	70	130	25	575

LED COMPLIANT WITH IEC60825-1 SAFETY OF LASER PRODUCTS.
WHEN OPERATED UP TO 20mA.

RoHS Compliant

Kinnex A

KINNEXA, INC.
4F, No. 347,Yang Guang St.,
Neihu , Taipei , Taiwan 11491

THIS DRAWING IS A CONTROLLED DOCUMENT.

TITLE: RJ45, WITH LED, with 10/100/1000 Magnetics and PHY 8P,25C, Shielded, Thru Hole.

PART NO: KRH-01C-H-A04-C71-HA1

UNIT	SHEET	REV
mm[inch]	2 of 4	01

DWG NO: KRH-01C-H-A04-C71-HA1
DRAWN: IVAN
CHKD: LEO
DATE: Jul.25,13

4. SCHEMATIC :

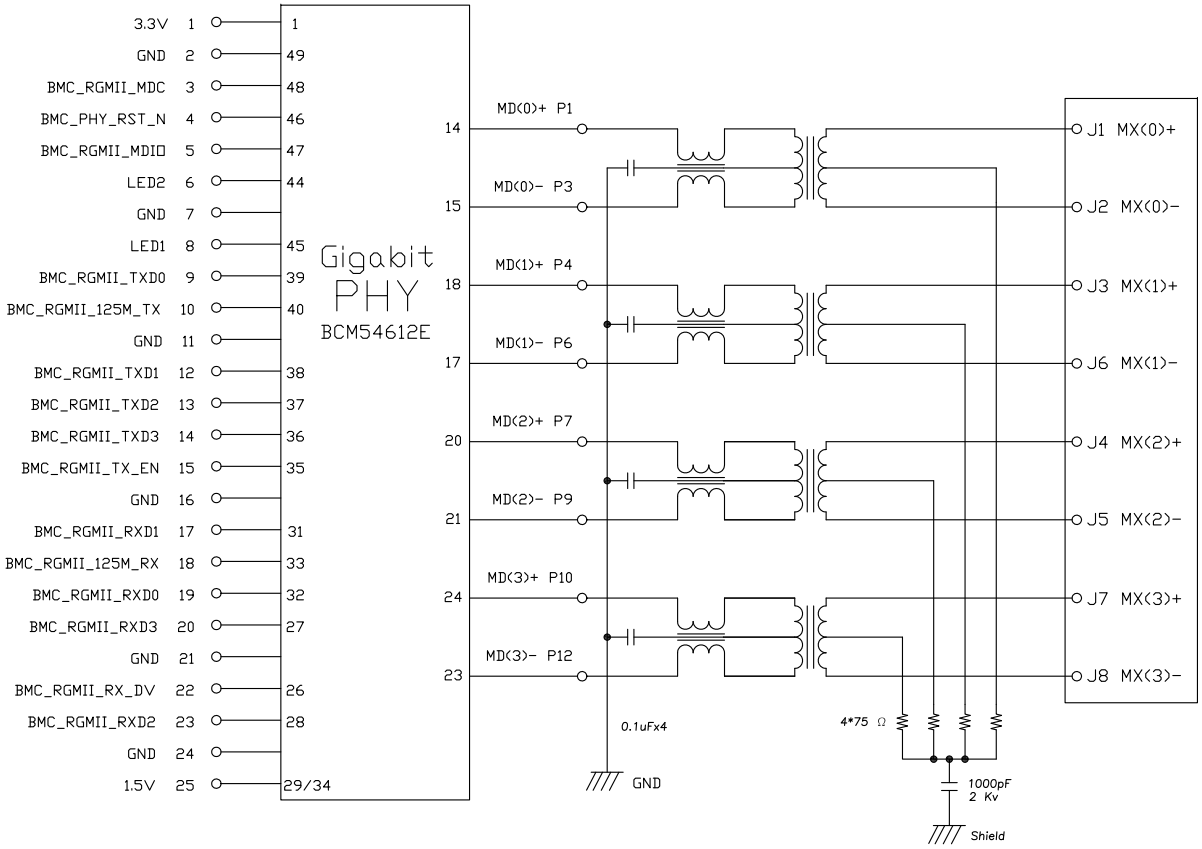

5. ELECTRICAL CHARACTERISTICS :

TEST NOTES:(25°±5°C)

1. TR:(100KHz,0.1V);
   INPUT TO OUTPUT=1:1±3%
2. LX:(100KHz,100mV,8mA, DC Bias)
   TRANSFORMER=350uH MINIMUM
3. DCR:
   EVERY RJ PAIR=1.2Ω MAXIMUM
4. HIPOT(ISOLATION VOLTAGE):
   INPUT TO OUTPUT : 1500VAC(2250 VDC) FOR 60 SECONDS
5. INSERTION LOSS:
   -0.8dB MAXIMUM AT 0.3MHz TO 100MHz;
   -1.2dB MAXIMUM AT 100MHz TO 125MHz
6. RETURN LOSS:
   -18dB MINIMUM AT 0.5MHz TO 40MHz;
   -12+20Log(f/80MHz)dB MINIMUM AT 40MHz TO 100MHz
7. CROSS TALK:
   -33+20Log(f/100MHz)dB MINIMUM AT 0.1MHz TO 100MHz
8. COMMON TO COMMON MODE REJECTION:
   -30dB MINIMUM AT 300KHz TO 100MHz
9. OPERATING TEMPERATURE : -40°C~+85°C
10. THE MAGNETIC CIRCUIT ON ALL FOUR CHANNELS ARE SYMMETRICAL AND SUPPORT AUTO-MDIX OPERATION.

KRH-01C-H-A04-C71-HA1

- PRODUCT SERIES: H : LATCH UP
- NUMBER OF PORTS / MECHANICAL TYPE: 01C : XRJH 1 PORT, LENGTH=37.00mm, HEIGHT=11.33mm
- LED COLOR OPTION: H
- CIRCUIT TYPE: A04
- LED POLARITY: C :TRI-COLOR, - +
- SHIELDED TYPE: 7 : EMI FINGER ON ALL SIDE
- SPECIAL CODE: 1 : OPERATING TEMPERATURE -40°C ~ +85°C
- CUSTOMER CODE: HA1

RoHS Compliant

Kinnex A

KINNEXA, INC.
4F, No. 347,Yang Guang St.,
Neihu , Taipei , Taiwan 11491

THIS DRAWING IS A CONTROLLED DOCUMENT.

TITLE:	RJ45, WITH LED, with 10/100/1000 Magnetics and PHY 8P,25C, Shielded, Thru Hole.
PART NO:	KRH-01C-H-A04-C71-HA1
DWG NO:	KRH-01C-H-A04-C71-HA1
DRAWN:	IVAN
CHKD:	LEO
DATE:	Jul.25,13

UNIT	SHEET	REV
mm[inch]	3 of 4	01

TOP COVER
313mm*240mm* 27mm

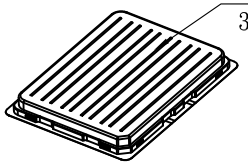

TRAY
313mm*240mm* 10mm

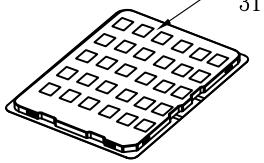

RoHS LABEL(LEFT) INNER LABEL(RIGHT)

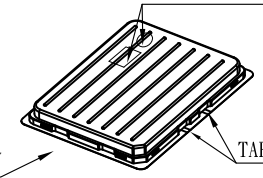

30 PCS/TRAY

TAPE

100.00 [3.937]

128.00 [5.039]

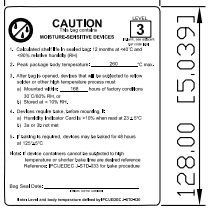

Humidity Warning

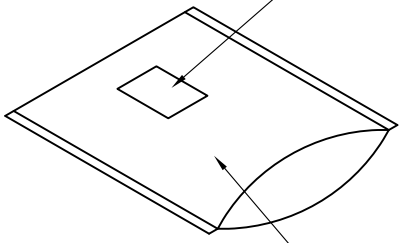

Anti Static Bag

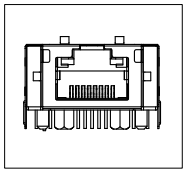

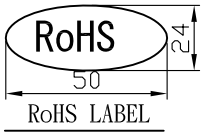

RoHS LABEL

INNER LABEL:

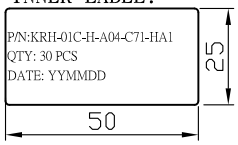

PACKING LABEL

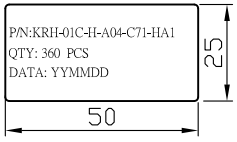

INNER CARTON
320mm*248mm*195mm
6 TRY / 180 PCS

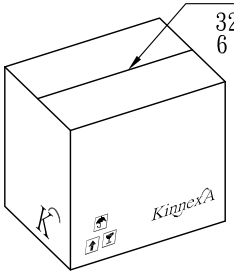

2 INNER CARTON/CARTON
360 PCS

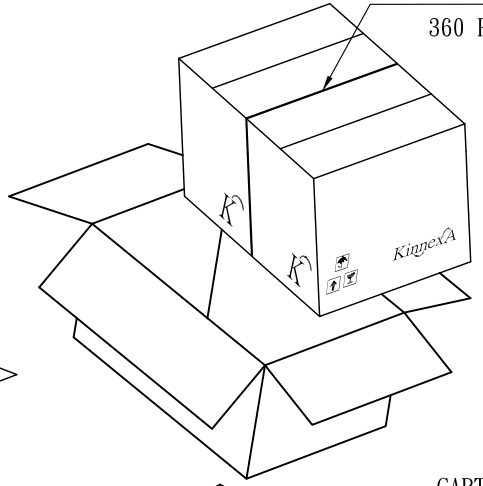

CARTON
515mm*340mm*220mm

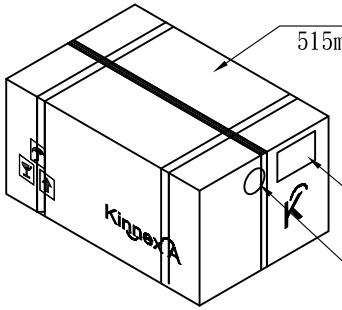

PACKING LABEL

RoHS LABEL

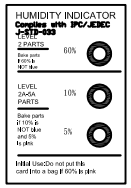

Humidity indicator

cators on top of the 6 trays

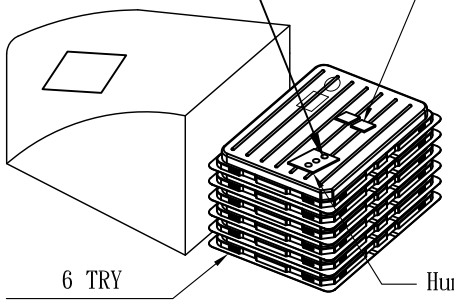

6 TRY
VACUUM SEALED

Humidity indicator

RoHS Compliant

Kinnex A

KINNEXA, INC.
4F, No. 347,Yang Guang St.,
Neihu , Taipei , Taiwan 11491

THIS DRAWING IS A CONTROLLED DOCUMENT.

TITLE:	RJ45, WITH LED, with 10/100/1000 Magnetics and PHY 8P,25C, Shielded, Thru Hole.
PART NO:	KRH-01C-H-A04-C71-HA1
DWG NO:	KRH-01C-H-A04-C71-HA1
DRAWN:	IVAN
CHKD:	LEO
DATE:	Jul.25,13

UNIT	SHEET	REV
mm[inch]	4 of 4	01