BR-502S2

(2P~)

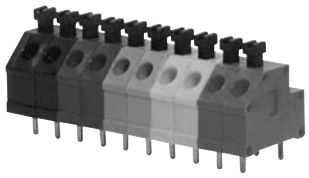

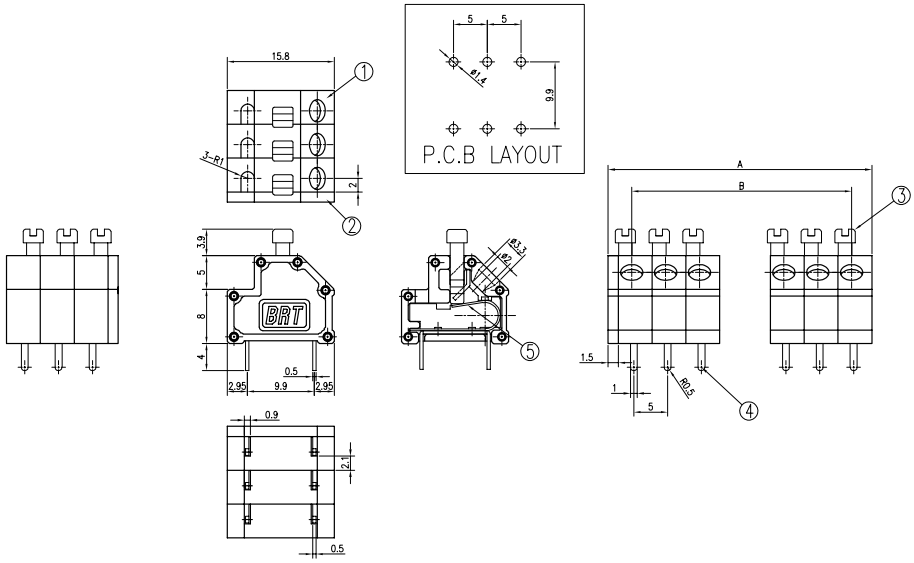

- Rating : 300V 10A
- Insulation Resistance : More Than 500MΩ DC 500V
- Withstand Voltage : AC2000V Per Minute
- Wire Size / Range : AWG24~14(Ø0.5~1.6mm)
- Maximum Acceptable Temperature : -25°C ~ +80°C
- Color : Red, Yellow, Green, Blue, Black

※조립공차: Pin당 ±0.04mm

No	Component Part	Material	Standard	Plated	Remark
1	Frame	P.A.66	UL94V-0	-	-
2	Side Cover	P.A.66	UL94V-0	-	-
3	Push Button	P.A.66	UL94V-2	-	-
4	Terminal	BRASS	C2680R	Sn	-
5	Plate Spring	SUS	SUS304	-	-

A-B Dimension

A.B Dimension	
A ±0.8	(P x 5.0) + 1.5
B ±0.8	(P - 1) x 5

BR-500SL

(2P~)

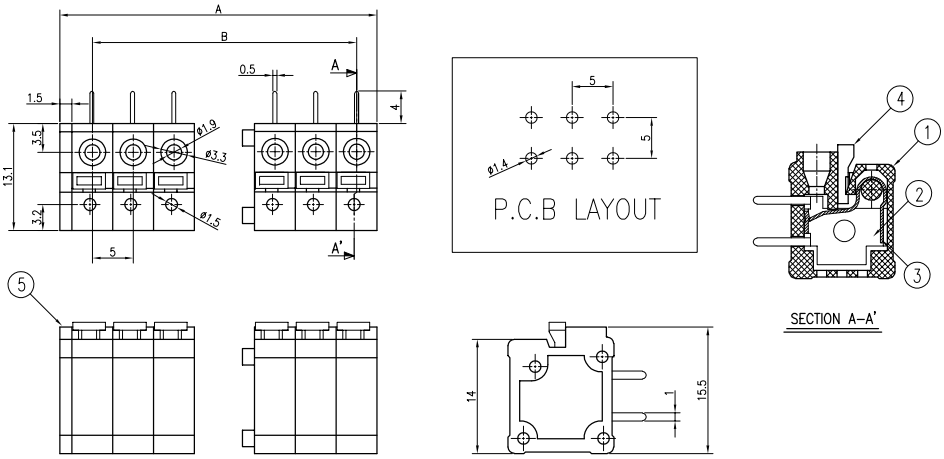

- Rating : 250V 10A
- Insulation Resistance : More Than 1000MΩ DC 500V
- Withstand Voltage : AC2000V Per Minute
- Wire Size / Range : AWG18~26
- Maximum Acceptable Temperature : -40°C ~ +105°C

※조립공차: Pin당 ±0.04mm

No	Component Part	Material	Standard	Plated	Remark
1	Frame	P.A.66	UL94V-0	-	-
2	Terminal	BRASS	C2680R	Sn	-
3	Plate Spring	SUS	SUS 304	-	-
4	Push Button	P.A.66	UL94V-0	-	-
5	Side Cover	P.A.66	UL94V-2	-	-

A-B Dimension

A.B Dimension	
A ±0.8	(P x 5.0) + 1.5
B ±0.8	(P - 1) x 5

※ 조립식 단자대는 경우에 따라 수축(또는 조립) 공차가 발생할 수 있습니다.