REVISION RECORD				
REV	ECO	DESCRIPTION	DRFT	CHKD

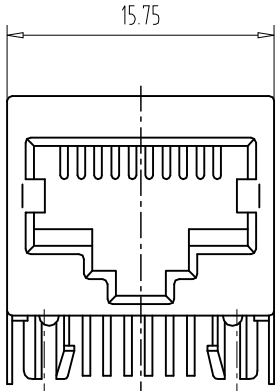

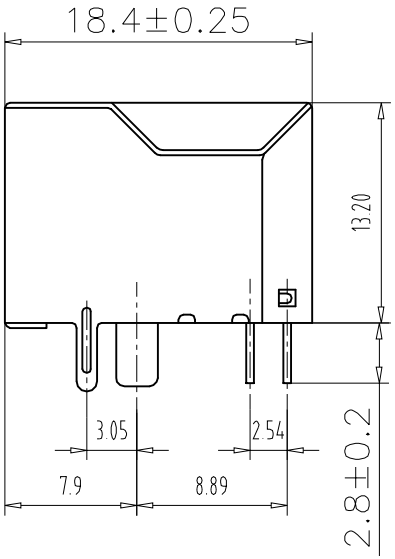

NOTES:

MATERIAL :

1.HOUSING MATERIAL	:GLASS FILLED POLYESTER UL94V-0.
2.CONTACT MATERIAL	:PHOSPHOR BRONZE ϕ0.45mm.
3.PLATING	:GOLD PLATING OVER NICKEL.

ELECTRICAL:

1.VOLTAGE RATING	:125 VAC RMS.
2.CURRENT RATING	:1.5 AMP.
3.CONTACT RESISTANCE	:30 MILLIOHMS MAX.
4.INSULATION RESISTANCE	:500 MEGOHMS MIN @ 500V DC .
5.DIELECTRIC WITHSTANDING RESISTANCE	:1000V AC RMS 50Hz. 1MIN.

MECHANICAL:

1. DURRABILITY	:750 CYCLES MIN.
2.PCB RETENTION PRE-SOLDER	:1 LB MIN.

ENVIRONMENTAL:

1. STORAGE	: -40℃~+85℃
2. OPERATION	: 0? TO 70?.

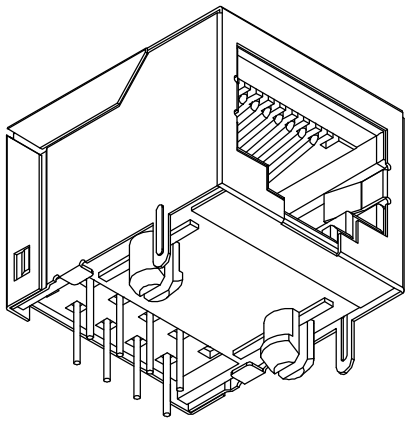

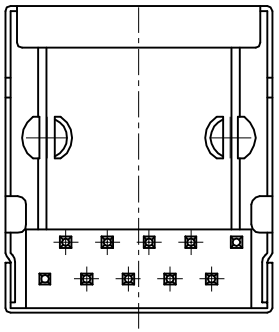

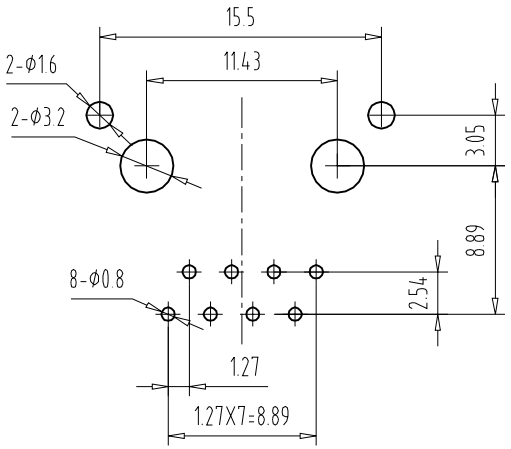

PC Board Layout

Component Side Shown

PART NUMBER:

ZP56A X X – X X X X X X X X

56 SERIES PCB JACK

POSITIONS	CONTACTS	PORTS	SHIELD	PEG/TAB	BACK PEG	PANEL	PLASTIC	LOGO	GOLD PLATING
6-6 POSITIONS	2-2 CONTACTS	1-1?	0-W/O SHIELD	0-W/O PEG	0-W/O BACK PEG	0-W/O PANEL	1-PBT	0-W/O LOGO	1-1.5u"
8-8 POSITIONS	4-4 CONTACTS	2-1?	1-FULL SHIELDED	1-FRONT PEG 3.05	1-1 BACK PEG	1-W/ PANEL	2-NYLON66	1-W/ ZPY	2-3u"
0-10 POSITIONS	6-6 CONTACTS	4-1?	2-HALF SHIELDED	2-FRONT PEG 3.68	2-2 BACK PEG		3-NYLON46	2-W/ UL	3-6u"
	8-8 CONTACTS	5-1?		3-FRONT PEG 4.57	3-3 BACK PEG			3-W/ ZPY&UL	4-15u"
	1-10 CONTACTS	6-1?		4-BACK PEG 3.05					5-30u"
		8-1?							6-50u"

MM (INCH)	DFT'D: SHB	DATE: 2007.05.03	
TOLERANCES EXCEPT AS NOTED	CHK'D: LANBO	DATE: 2007.05.03	
MM .0 ± 0.15 ± .00 ± 0.075 ± .000 ± 0.05 ±	MFG:	DATE:	
	APPVL:	DATE:	
ANGLES ± 0.5	MATERIAL :		TITLE 56A. 1X1带屏蔽10P8C
THIRD ANGLE PROJECTION	Q.T'Y :		DRAWING NO. SIZE A3 REV 0
DETACHED LISTS	FINISH :		/PART NO.
	SCALE :		DO NOT SCALE DRAWING SHEET X OF Y

8 7 6 5 4 3 2 1

G F E D C B A