Specification Sheet

Model No. : HSM12864Q-1

Description : 128*64 STN LCD Module ,Backlight Color Option , AIP31066 Controller,Wide Temp, Popular Size

RECORDS OF REVISION

Date	Rev.	Description	Page	Design by
2012/4/9	0	New Sample.	-	-
			-	-

Contents

1. SPECIFICATIONS
   - 1.1 Features
   - 1.2 Mechanical Specifications
   - 1.3 Absolute Maximum Ratings
   - 1.4 Backlight & LED Characteristics

2. MODULE STRUCTURE
   - 2.1 Counter Drawing
   - 2.2 Interface Pin Description
   - 2.3 Timing Characteristics
   - 2.4 Instruction Table
   - 2.5 Inspection Specification

1. SPECIFICATIONS

1.1 Features

Item	Standard Value
Display Type	128 x 64 DOTS
Driver Condition	LCD Module : 1/64 Duty , 1/9 Bias
Viewing Direction	6 O'Clock
Interface	8-bit MPU interface
Driver IC	AIP31107，AIP31108

1.2 Mechanical Specifications

Item	Standard Value	Unit
Outline Dimension	93(L) X70(W) X12.5(T)	mm
Viewing Area	72(L) X 39(W)	mm
Dot size	0.48(W) × 0.48(H)	mm
Dot pitch	0.52(W) × 0.52(H)	mm
Character size	----------	mm

HSM12864Q-1 Series Table

No.	Part Number	LCD Type	Backlight Color	Graphic & Font Color	Background Color
1	HSM12864Q-1-B	STN,Blue,Negative	White	White	Blue
2	HSM12864Q-1-Y	STN,Yellow-Green, Positive	Yellow-Green	Black	Yellow-Green
3	HSM12864Q-1-G	STN,Gray,Positive	White	Dark-Blue	Gray
4	HSM12864Q-1-G-W	FSTN,Gray,Positive	White	Black	Gray
5	HSM12864Q-1-G-O	FSTN,Gray,Positive	Orange	Black	Orange
6	HSM12864Q-1-G-R	FSTN,Gray,Positive	Red	Black	Red

1.3 Absolute Maximum Ratings

Item	Symbol	Condition	Min.	Max.	Unit
System Power Supply Voltage	VDD	-	-0.3	5.5	V
LCD Driver Supply Voltage	VLCD	-	-0.3	+12.0	V
Input Voltage	V_{IN}	-	-0.3	VDD + 0.3	V
Operating Temperature	T_{OP}	-	-20	70	°C
Storage Temperature	T_{ST}	-	-30	80	°C
Storage Humidity	H_D	Ta < 40 °C	20	90	%RH

1.4 Backlight Characteristics

LCD Module with LED Backlight

Electrical / Optical Characteristics

Ta =25℃

Item	Symbol	Conditions	Min.	Typ.	Max.	Unit
Forward Voltage	Vf	If=80mA	4.8	5.0	5.2	V
Reverse Current	Ir	If=5v			--	uA
Average Brightness	IV	If=80mA				cd/m^2
Wavelength (Without LCD)	λ d	If=80mA	--	--	--	nm
Luminous Intensity (without LCD)	Lv Sub	If=80mA				cd/m^2
Uniformity	Δ%	IvMin / IvMax *100%	75	-	-	%
Color	WHITE					

2. MODULE STRUCTURE

2.1 Counter Drawing

2.1.1 LCM Mechanical Diagram

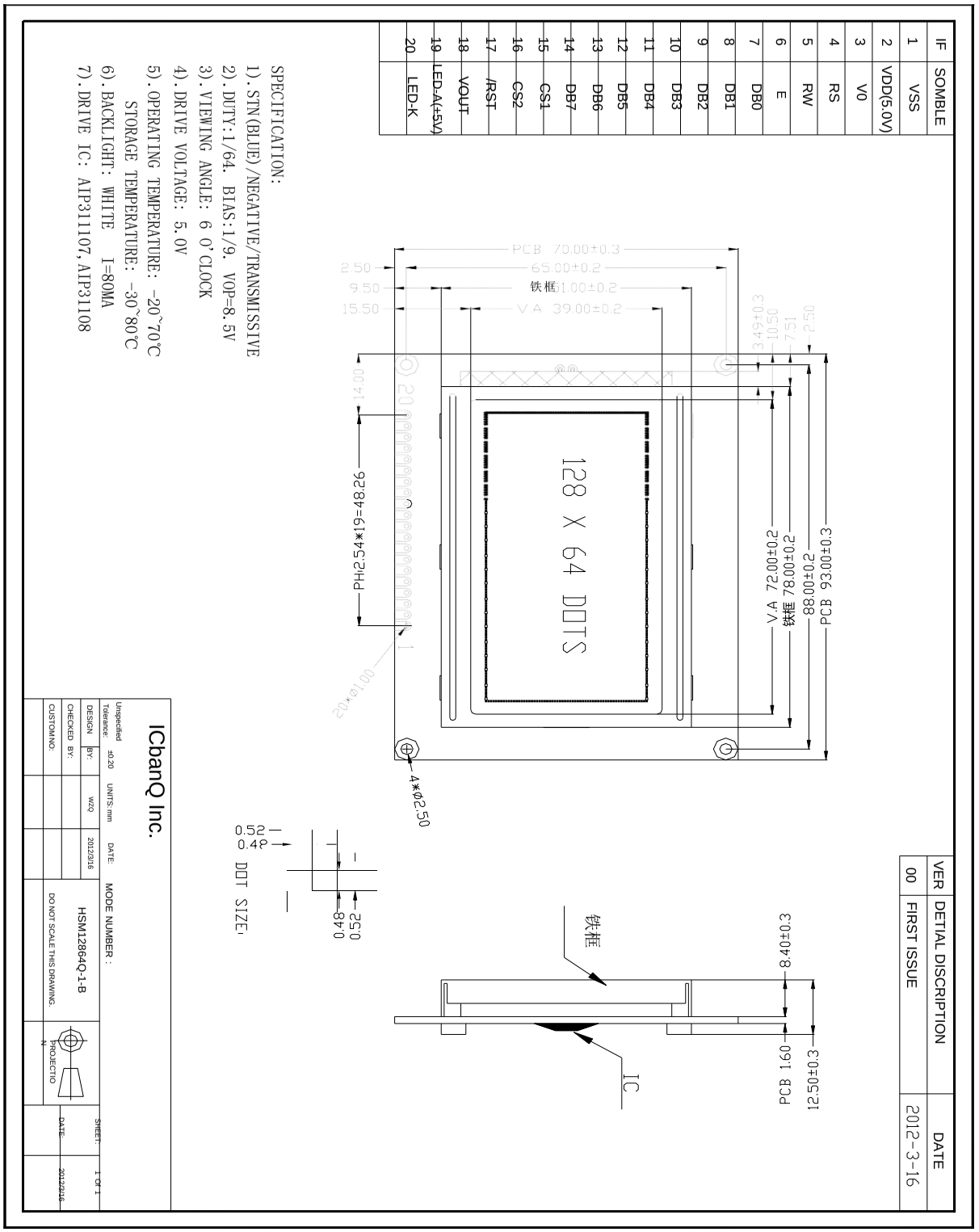

2.2 Interface Pin Description

No.	Symbol	Function
1	VSS	Ground (0V)
2	VDD	Supply Voltage for Logic (+5.0V)
3	VO	Contrast Adjustment
4	RS	Data/Instruction Select
5	R/W	Read/Write Select
6	E	Enable Signal
7--14	DB0—DB7	Data Bus
15	CS1	Chip Select active “H”
16	CS2	Chip Select active “H”
17	RST	Reset signal , active “L”
18	VOUT	Output voltage for LCD driving
19	LED_A	LED Power Supply + (5.0V)
20	LED_K	LED Power Supply -

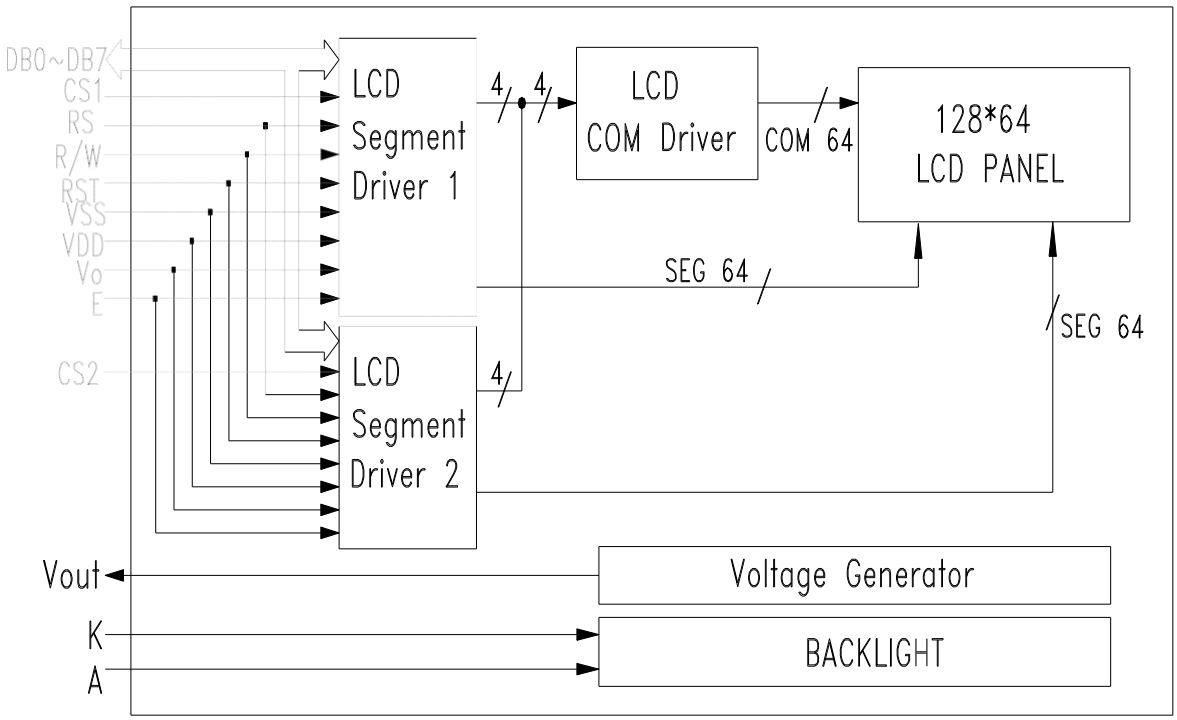

2.3 Timing Characteristics

DC Characteristics (V_{DD}=4.5~5.5V, V_{SS}=0V, V_{DD}-V_{EE}=8~17V, T_a=-30~+85°C)

Characteristic	Symbol	Condition	Min	Typ	Max	Unit	Note
Input High Voltage	V_{IH1}	-	0.7V_{DD}	-	V_{DD}	V	*1
	V_{IH2}	-	2.0	-	V_{DD}	V	*2
Input Low Voltage	V_{IL1}	-	0	-	0.3V_{DD}	V	*1
	V_{IL2}	-	0	-	0.8	V	*2
Output High Voltage	V_{OH}	I_{OH}=-200μA	2.4	-	-	V	*3
Output Low Voltage	V_{OL}	I_{OL}=1.6mA	-	-	0.4	V	*3
Input Leakage Current	I_{LKG}	V_{IN}=V_{SS}~V_{DD}	-1.0	-	1.0	μA	*4
Three-state(OFF) Input Current	I_{TSL}	V_{IN}=V_{SS}~V_{DD}	-5.0	-	5.0	μA	*5
Driver Input Leakage Current	I_{DIL}	V_{IN}=V_{EE}~V_{DD}	-2.0	-	2.0	μA	*6
Operating Current	I_{DD1}	During Display	-	-	100	μA	*7
	I_{DD2}	During Access Access Cycle=1MHz	-	-	500	μA	*7
On Resistance	R_{ON}	V_{DD}-V_{EE}=15V ¡¾I_{LOAD}=0.1mA	-	-	7.5	KΩ	*8

AC Characteristics

(1) Clock Timing

Characteristic	Symbol	Min	Typ	Max	Unit
CLK1, CLK2 Cycle Time	t_{CY}	2.5	-	20	μS
CLK1 'LOW' Level Width	t_{WL1}	625	-	-	ns
CLK2 'LOW' Level Width	t_{WL2}	625	-	-	
CLK1 'HIGH' Level Width	t_{WH1}	1875	-	-	
CLK2 'HIGH' Level Width	t_{WH2}	1875	-	-	
CLK1-CLK2 Phase Difference	t_{D12}	625	-	-	
CLK2-CLK1 Phase Difference	t_{D21}	625	-	-	
CLK1, CLK2 Rise Time	t_R	-	-	150	
CLK1, CLK2 Fall Time	t_F	-	-	150	

(2) Display Control Timing

Characteristic	Symbol	Min	Typ	Max	Unit
FRM Delay Time	t_{DF}	-2	-	+2	us
M Delay Time	t_{DM}	-2	-	+2	us
CL 'LOW' Level Width	t_{WL}	35	-	-	us
CL 'HIGH' Level Width	t_{WH}	35	-	-	us

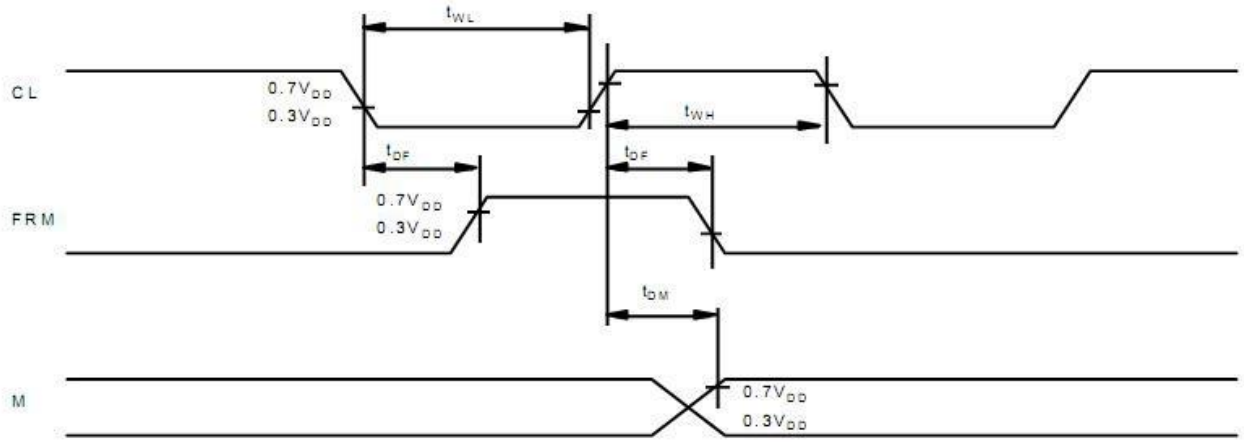

Fig 2. Display control signal waveform

(3) MPU Interface

Chatacteristic	Symbol	Min	Typ	Max	Unit
E Cycle	t_C	1000	-	-	ns
E High Level Width	t_{WH}	450	-	-	ns
E Low Level Width	t_{WL}	450	-	-	ns
E Rise Time	t_R	-	-	25	ns
E Fall Time	t_F	-	-	25	ns
Address Set-Up Time	t_{ASU}	140	-	-	ns
Address Hold Time	t_{AH}	10	-	-	ns
Data Set-Up Time	t_{SU}	200	-	-	ns
Data Delay Time	t_D	-	-	320	ns
Data Hold Time (Write)	t_{DHW}	10	-	-	ns
Data Hold Time (Read)	t_{DHR}	20	-	-	ns

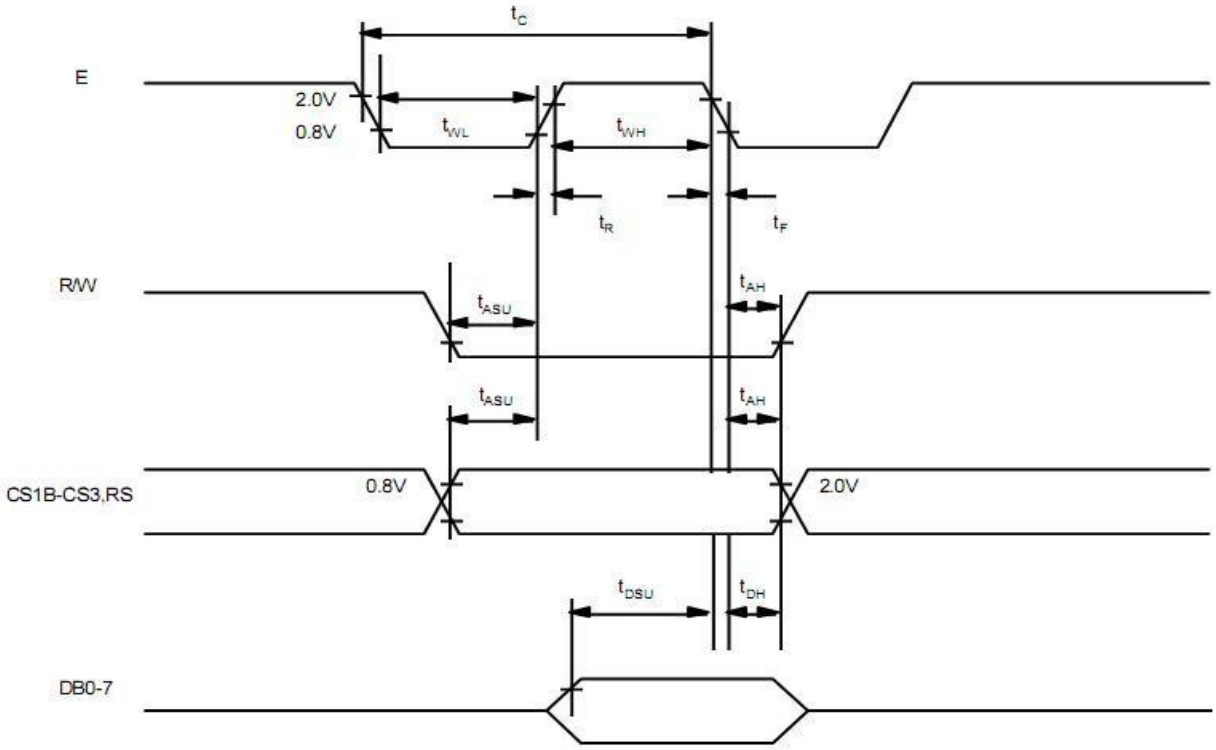

Fig 3. MPU write timing

4. Reset

Reset can be initialized system by setting RSTB terminal at low level when turning power on, receiving instruction from MPU. When RSTB becomes low, following procedure is occured.

1. Display off
2. Display start line register become set by 0.(Z-address 0)

While RSTB is low, any instruction except status read can be accepted. Reset status appers at DB4. After DB4 is low, any instruction can be accepted.

The Conditions of power supply at initial power up are shown in table 1.

Table 1. Power Supply Initial Conditions

Item	Symbol	Min	Typ	Max	Unit
Reset Time	t_{RS}	1.0	-	-	us
Rise Time	t_R	-	-	200	ns

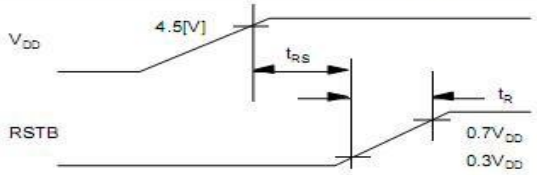

2.4 Instruction Table

◆ **Display Control Instruction**

Instruction	RS	R/W	DB7	DB6	DB5	DB4	DB3	DB2	DB1	DB0	Function
Display ON/OFF	L	L	L	L	H	H	H	H	H	L/H	Controls the display on or off. Internal status and display RAM data is not affected. L:OFF, H:ON
Set Address	L	L	L	H	Y address (0~63)						Sets the Y address in the Y address counter.
Set Page (X address)	L	L	H	L	H	H	H	Page (0~7)			Sets the X address at the X address register.
Display Start Line	L	L	H	H	Display start line (0~63)						Indicates the display data RAM displayed at the top of the screen.
Status Read	L	H	BUSY	L	ON/OFF	RESET	L	L	L	L	Read status. BUSY L: Ready H: In operation ON/OFF L: Display ON H: Display OFF RESET L: Normal H: Reset
Write Display Data	H	L	Write Data								Writes data (DB0:7) into display data RAM. After writing intruction, Y address is increased by 1 automatically.
Read Display Data	H	H	Read Data								Reads data (DB0:7) from display data RAM to the data bus.

2.5 Inspection Specification

◆Inspection Standard : MIL-STD-105E Table Normal Inspection Single Sampling Level Ⅱ .

◆Equipment : Gauge、MIL-STD、Powertip Tester、Sample

◆Defect Level : Major Defect AQL 0.4; Minor Defect AQL 1.5 .

◆OUT Going Defect Level : Sampling .

◆Manner of appearance test :

(1). The test be under 40W×2 fluorescent light ' and distance of view must be at 30 cm.

(2). The test direction is base on about around 45° of vertical line. (Fig. 1)

(3). Definition of area . (Fig. 2)

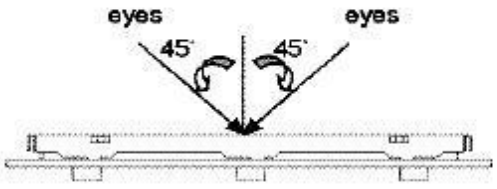

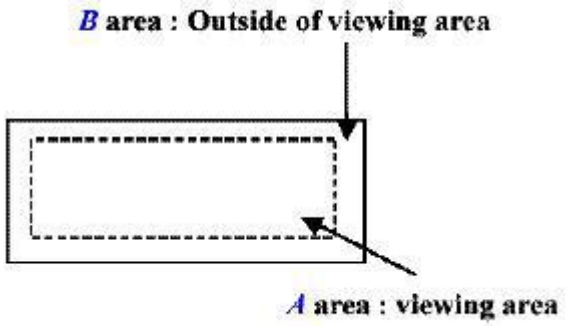

◆ Specification:

NO	Item	Criterion	level
01	Product condition	1.1 The part number is inconsistent with work order of Production.	Major
		1.2 Mixed production types.	Major
		1.3 Assembled in inverse direction.	Major
02	Quantity	2.1 The quantity is inconsistent with work order of production.	Major
03	Outline dimension	3.1 Product dimension and structure must conform to Structure diagram.	Major
04	Electrical Testing	4.1 Missing line character、dot and icon.	Major
		4.2 No function or no display.	Major
		4.3 Output data is error.	Major
		4.4 LCD viewing angle defect.	Major
		4.5 Current consumption exceeds product specifications.	Major
05	Black or white dot、scratch、contamination Round type	5.1 Round type: 5.1.1 display only : ・White and black spots on display ≦ 0.25mm, no more than Four white or black spots present. ・Densely spaced : NO more than two spots or lines within 3mm	Minor

◆Specification :

NO	Item	Criterion	level

05	Black or white dot、scratch、contamination Round type 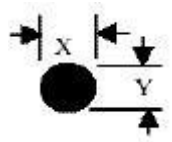 Φ=(x+y)/2 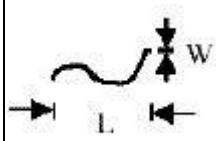 	5.1.2 Nom-display : Dimension (diameter : Φ) Acceptance(Q'ty) Φ≦0.10mm Accept no dense 0.10mm＜Φ≦0.20mm 3 0.20mm＜Φ≦0.25mm 2 Total 4 5.1.3 Line type: Dimension (diameter : Φ) Acceptance (Q'ty) Length width A area B area --- w≦0.03mm Accept no dense Don't count L≦3.0mm 0.03mm＜ [illegible] 4 Don't count L≦2.5mm 0.05mm＜ [illegible] Don't count --- w＞0.075mm As round type	Minor

06	Polarizer Bubble	Dimension (diameter : Φ) Acceptance(Q'ty) A area Φ≦0.20mm Accept no dense B area Don't count 0.20mm＜Φ≦0.50mm 3 Don't count 0.50mm＜Φ≦1.00mm 2 Don't count Φ＞1.00mm 0 Don't count Total quantity 4 Don't count	Minor
07	The crack of glass	● Glass Crack: 7.1 Crack on the circuit of electrode terminal :  X Y Z Front X≦1/5a Y≦1/2D Z≦t Back Neglect	Minor

◆Specification :

NO	Item	Criterion	Level
07	The crack of glass X: The length of Crack Y: The width of crack Z: The thickness of crack D: terminal length T: The thickness of glass A : The length of glass	⬬ Glass Crack: 7.2 General glass crack and corner edge: 7.2.1 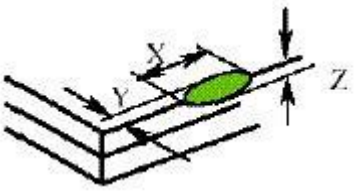 X Y Z Neglect Out A area Neglect 7.2.2 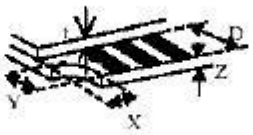 X Y Z Neglect Out A area Neglect	Minor
		7.3 Glass remain: 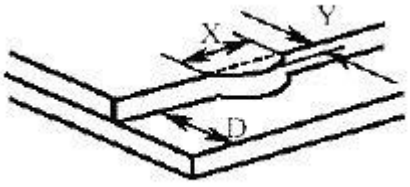 X Y Neglect ≦ 1/3 d	Minor

◆Specification :

NO	Item	Criterion	Level
07	The crack of glass X: The length of Crack Y: The width of crack Z: The thickness of crack D: terminal length T: The thickness of glass A : The length of glass	7.4 Corner crack and medial crack: 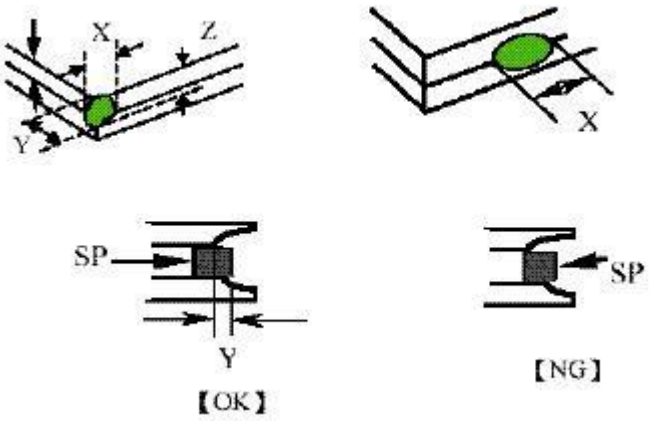 X Y Z ≦1/5a Crack can't enter viewing area ≦1/2t ≦1/5a Crack can't exceed the half of width of SP width of SP 1/2t<Z≦2t	Minor
08	Backlight elements	8.1 Backlight can't work normally.	Major
		8.2 Backlight doesn't light or color is wrong.	Major
		8.3 Illumination source flickers when lit.	Major
09	General appearance	9.1 pin type must match type in specification sheet	Major
		9.2 No short circuits in components on PCB or FPC	Major
		9.3Product packaging must the same as specified on packaging specification sheet.	Major
		9.4 The folding and peeled off in polarizer are not acceptable	Major
		9.5 The PCB or FPC between B/L assembled distance (PCB or FPC) is ≦1.5mm	Major