Specification Sheet

Model No. : HSM1601A-6

Description : 16*1 STN LCD Module ,Backlight Color Option , AIP31066 Controller,Wide Temp, Popular Size.

RECORDS OF REVISION

Date	Rev.	Description	Page	Design by
2016/9/9	0	New Sample.	-	-
			-	-

Contents

1. SPECIFICATIONS
   - 1.1 Features
   - 1.2 Mechanical Specifications
   - 1.3 Absolute Maximum Ratings
   - 1.4 DC Electrical Characteristics
   - 1.5 Backlight & LED Characteristics

2. MODULE STRUCTURE
   - 2.1 Counter Drawing
   - 2.2 Interface Pin Description
   - 2.3 Timing Characteristics
   - 2.4 Instruction Table
   - 2.5 Character Generator ROM
   - 2.6 Inspection Specification

1. SPECIFICATIONS

1.1 Features

Item	Standard Value
Display Type	16 Characters x 1 Lines
Driver Condition	LCD Module : 1/16 Duty , 1/5 Bias
Viewing Direction	6 O'Clock
Interface	8-bit MPU interface
Driver IC	AIP31066

1.2 Mechanical Specifications

Item	Standard Value	Unit
Outline Dimension	80(L) * 36(W) * 13.0(T)	mm
Viewing Area	64.5(L) * 14.5(W)	mm
Dot size	0.54(W) × 0.60(H)	mm
Dot pitch	0.59(W) × 0.65(H)	mm
Character size	2.9(W) × 5.15(H)	mm

HSM1601A-6 Series Table

No.	Part Number	LCD Type	Backlight Color	Graphic & Font Color	Background Color
1	HSM1601A-6-B	STN,Blue,Negative, Transmissive	White	White	Blue
2	HSM1601A-6-Y	STN,Yellow-Green, Positive, Transflective	Yellow-Green	Black	Yellow-Green
3	HSM1601A-6--G	STN,Gray,Positive, Transflective	White	Dark-Blue	Gray
4	HSM1601A-6-G-W	FSTN,Gray,Positive, Transflective	White	Black	Gray
5	HSM1601A-6-G-O	FSTN,Gray,Positive, Transflective	Orange	Black	Orange
6	HSM1601A-6-G-R	FSTN,Gray,Positive, Transflective	Red	Black	Red

1.3 Absolute Maximum Ratings

Item	Symbol	Condition	Min.	Max.	Unit
System Power Supply Voltage	VDD	-	-0.3	5.5	V
LCD Driver Supply Voltage	VLCD	-	VDD-12	VDD-0.3	V
Input Voltage	V_{IN}	-	-0.3	VDD + 0.3	V
Operating Temperature	T_{OP}	-	-20	70	°C
Storage Temperature	T_{ST}	-	-30	80	°C
Storage Humidity	H_D	Ta < 40 °C	20	70	%RH

1.4 DC Electrical Characteristics

VDD = 5.0V ± 0.2V, GND = 0V, Ta = 25°C

Item	Symbol	Condition	Min.	Typ.	Max.	Unit
Logic Supply Voltage	VDD	-	3.0	5.0	5.5	V
Input High Voltage	V_{IH}	-	0.8VDD	-	VDD	V
Input Low Voltage	V_{IL}	-	GND	-	0.3VDD	V
Output High Voltage	V_{OH}	-	0.7VDD	-	VDD	V
Output Low Voltage	V_{OL}	-	GND	-	0.2VDD	V

1.5 Backlight Characteristics

LCD Module with LED Backlight

Electrical / Optical Characteristics

Ta =25℃

Item	Symbol	Conditions	Min.	Typ.	Max.	Unit
Forward Voltage	Vf	If=20mA	4.8	5.0	5.2	V
Reverse Current	Ir	If=5v			--	uA
Average Brightness	IV	If=20mA				cd/m^2
Wavelength (Without LCD)	λ d	If=20mA	--	--	--	nm
Luminous Intensity (without LCD)	Lv Sub	If=20mA				cd/m^2
Uniformity	Δ%	IvMin / IvMax *100%	--	-	-	%
Color	WHITE					

2. MODULE STRUCTURE

2.1 Counter Drawing

2.1.1 LCM Mechanical Diagram

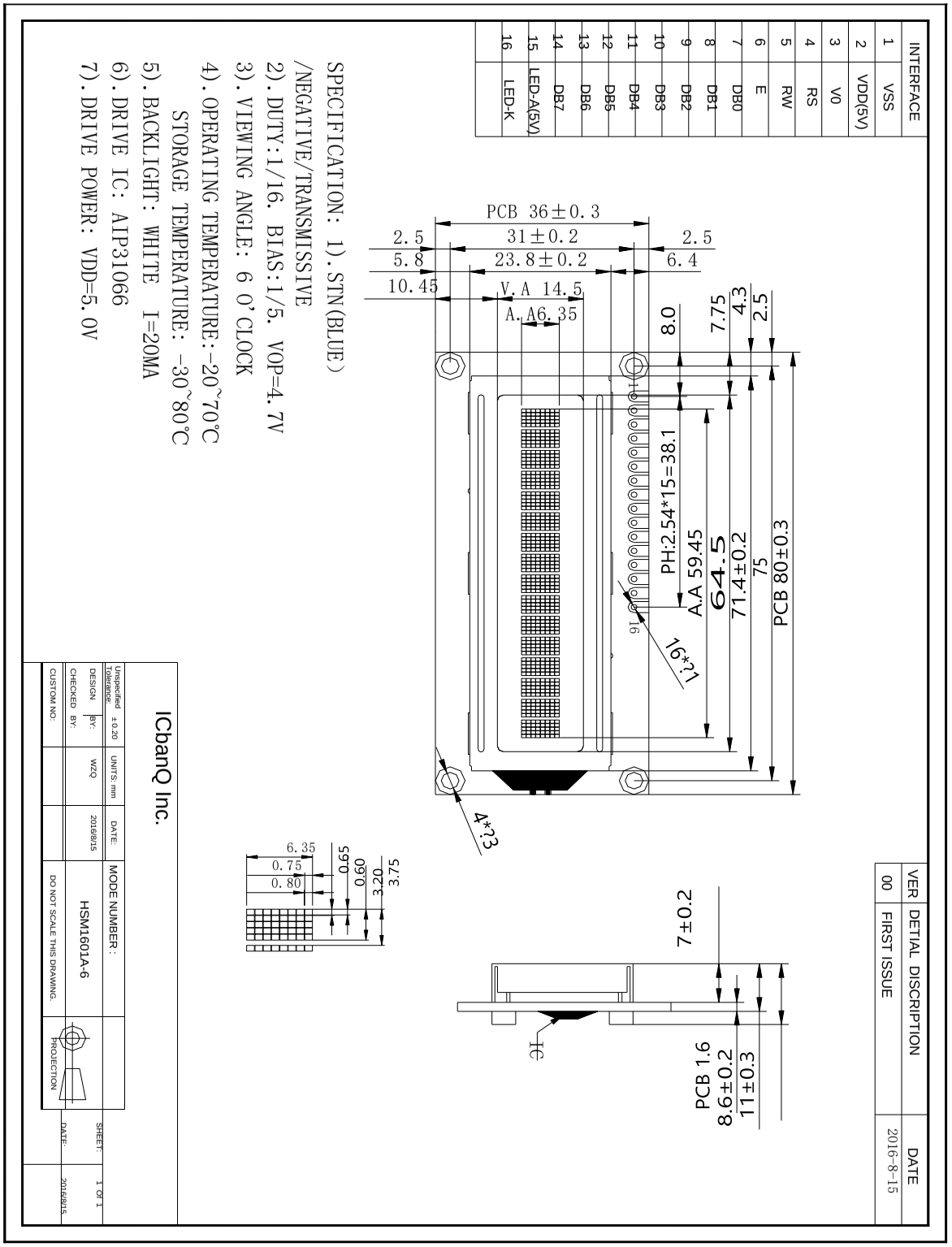

2.2 Interface Pin Description

No.	Symbol	Function
1	VSS	Ground (0V)
2	VDD	Supply Voltage for Logic (+5.0V)
3	VO	Contrast Adjustment
4	RS	Data/Instruction Select
5	R/W	Read/Write Select
6	E	Enable Signal
7	DB0	Data Bus
8	DB1	Data Bus
9	DB2	Data Bus
10	DB3	Data Bus
11	DB4	Data Bus
12	DB5	Data Bus
13	DB6	Data Bus
14	DB7	Data Bus
15	LED_A	LED Power Supply + (5.0V)
16	LED_K	LED Power Supply - (0V)

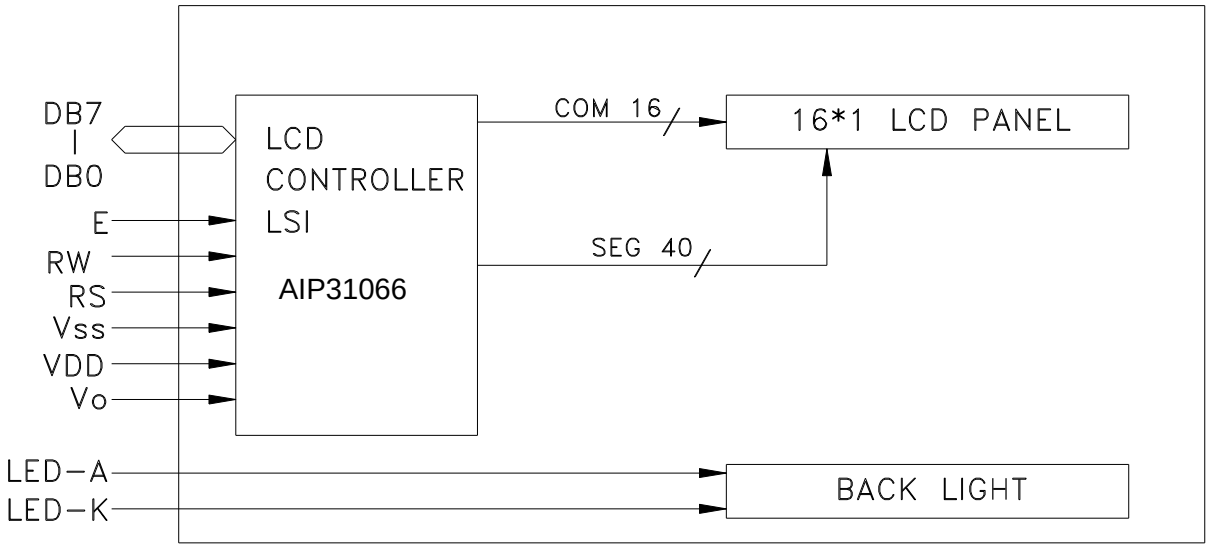

2.3 Timing Characteristics

DC Characteristics

Characteristics	Symbol	Limit			Unit	Test Condition
		Min.	Typ.	Max.		
Operating Current	IDD	-	0.55	0.8	mA	External clock (Note)
Input High Voltage	V_{IH1}	2.2	-	VDD	V	Pins:(E, RS, R/W, DB7 - 0)
Input Low Voltage	V_{IL1}	-0.3	-	0.6	V	
Input High Voltage	V_{IH2}	VDD-1	-	VDD	V	Pin OSC1
Input Low Voltage	V_{IL2}	-0.2	-	1.0	V	Pin OSC1
Input High Current	I_{IH}	-2.0	-	2.0	μA	Pins: (RS, R/W, DB7 - 0)
Input Low Current	I_{IL}	-20.0	-50.0	-100.0	μA	VDD = 5.0V
Output High Voltage (TTL)	V_{OH1}	2.4	-	VDD	V	I_{OH} = - 0.1mA Pins: DB7 - 0
Output Low Voltage (TTL)	V_{OL1}	-	-	0.4	V	I_{OL} = 0.1mA Pins: DB7 - 0
Output High Voltage (CMOS)	V_{OH2}	0.9VDD	-	VDD	V	I_{OH} = - 40.0μA, Pins: CL1, CL2, M, D
Output Low Voltage (CMOS)	V_{OL2}	-	-	0.1VDD	V	I_{OL} = 40.0μA, Pins: CL1, CL2, M, D
Driver ON Resistance (COM)	R_{COM}	-	-	20.0	KΩ	I_O = ±50.0μA, V_{LCD} = 4.0V Pins: COM16 - 1
Driver ON Resistance (SEG)	R_{SEG}	-	-	30.0	KΩ	I_O = ±50.0μA, V_{LCD} = 4.0V Pins: SEG40 - 1
LCD Voltage	V_{LCD}	3.0	-	11.0	V	VDD - V5, 1/4 bias or 1/5 bias

Note: F_{OSC} = 250.0KHz, VDD = 5.0V, pin E = "L", RS, R/W, DB7 - 0 are open, all outputs are no loads.

AC Characteristics

Characteristics	Symbol	Limit			Unit	Test Condition
		Min.	Typ.	Max.		
OSC Frequency	F_{OSC1}	190.0	270.0	350.0	KHz	VDD = 5.0V Rf = 91.0KΩ±2%

Timing Diagram

Writing mode

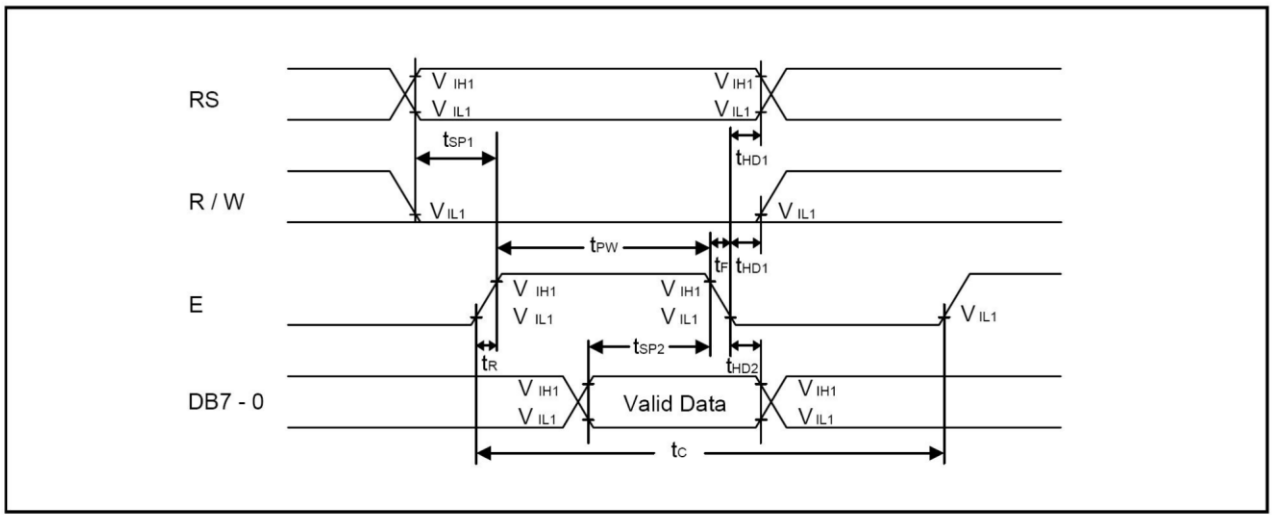

Characteristics	Symbol	Limit			Unit	Test Condition
		Min.	Typ.	Max.		
E Cycle Time	t_C	400.0	-	-	ns	Pin E
E Pulse Width	t_{PW}	150.0	-	-	ns	Pin E
E Rise/Fall Time	t_R, t_F	-	-	25.0	ns	Pin E
Address Setup Time	t_{SP1}	30.0	-	-	ns	Pins: RS, R/W, E
Address Hold Time	t_{HD1}	10.0	-	-	ns	Pins: RS, R/W, E
Data Setup Time	t_{SP2}	40.0	-	-	ns	Pins: DB7 - 0
Data Hold Time	t_{HD2}	10.0	-	-	ns	Pins: DB7 - 0

Read mode

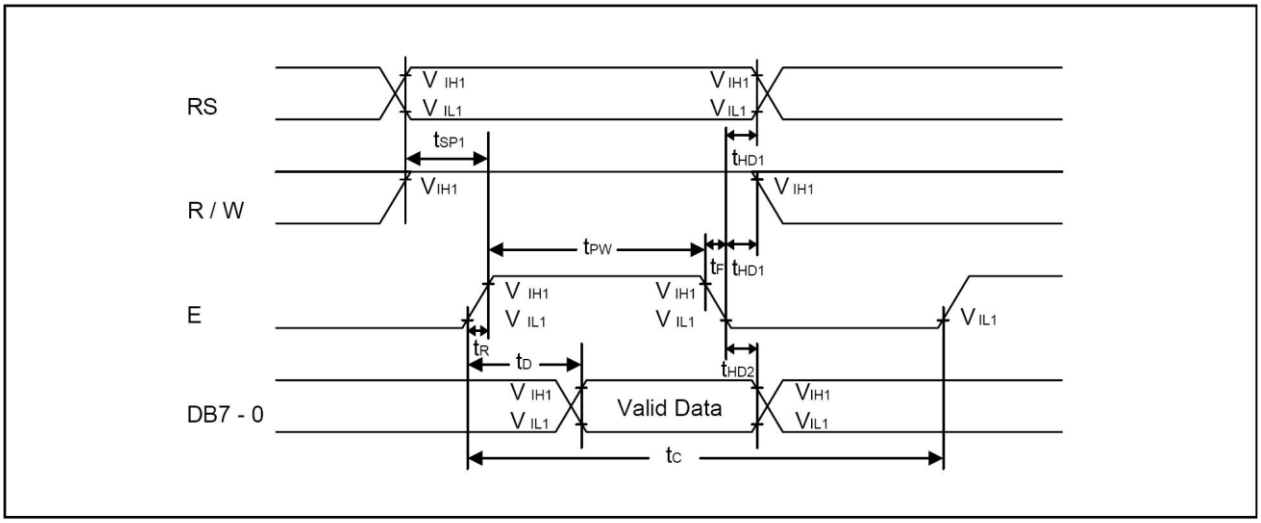

Characteristics	Symbol	Limit			Unit	Test Condition
		Min.	Typ.	Max.		
E Cycle Time	t_C	400.0	-	-	ns	Pin E
E Pulse Width	t_W	150.0	-	-	ns	Pin E
E Rise/Fall Time	t_R, t_F	-	-	25.0	ns	Pin E
Address Setup Time	t_{SP1}	30.0	-	-	ns	Pins: RS, R/W,E
Address Hold Time	t_{HD1}	10.0	-	-	ns	Pins: RS, R/W,E
Data Output Delay Time	t_D	-	-	100.0	ns	Pins: DB7 - 0
Data hold time	t_{HD2}	20.0	-	-	ns	Pin DB7 - 0

2.4 Instruction Table

◆ Display Control Instruction

Instruction	Instruction Code										Description	Execution time (F_{osc} = 270KHz)
	RS	RW	DB7	DB6	DB5	DB4	DB3	DB2	DB1	DB0		
Clear Display	0	0	0	0	0	0	0	0	0	1	Write "20H" to DDRAM and set DDRAM address to "00H" from AC	1.52ms
Return Home	0	0	0	0	0	0	0	0	1	-	Set DDRAM address to "00H" from AC and return cursor to its original position if shifted. The contents of DDRAM are not changed.	1.52ms
Entry Mode Set	0	0	0	0	0	0	0	1	I/D	S	Assign cursor moving direction and enable the shift of entire display	38μs
Display ON/ OFF Control	0	0	0	0	0	0	1	D	C	B	Set display(D), cursor(C), and blinking of cursor(B) on/off control bit.	38μs
Cursor or Display Shift	0	0	0	0	0	1	S/C	R/L	-	-	Set cursor moving and display shift control bit, and the direction, without changing of DDRAM data.	38μs
Function Set	0	0	0	0	1	DL	N	F	-	-	Set interface data length (DL: 8-bit/4-bit), numbers of display line (N: 2-line/1-line) and, display font type (F: 5x10 dots/5x8 dots)	38μs
Set CGRAM Address	0	0	0	1	AC5	AC4	AC3	AC2	AC1	AC0	Set CGRAM address in address counter.	38μs
Set DDRAM Address	0	0	1	AC6	AC5	AC4	AC3	AC2	AC1	AC0	Set DDRAM address in counter	38μs
Read Busy Flag and Address Counter	0	1	BF	AC6	AC5	AC4	AC3	AC2	AC1	AC0	Whether during internal operation or not can be known by reading BF. The contents of address counter can also be read.	
Write Data to RAM	1	0	D7	D6	D5	D4	D3	D2	D1	D0	Write data into internal RAM (DDRAM/CGRAM).	38μs
Read Data from RAM	1	1	D7	D6	D5	D4	D3	D2	D1	D0	Read data from internal RAM (DDRAM/CGRAM).	38μs

* "-": don't care

2.5 Character Generator ROM

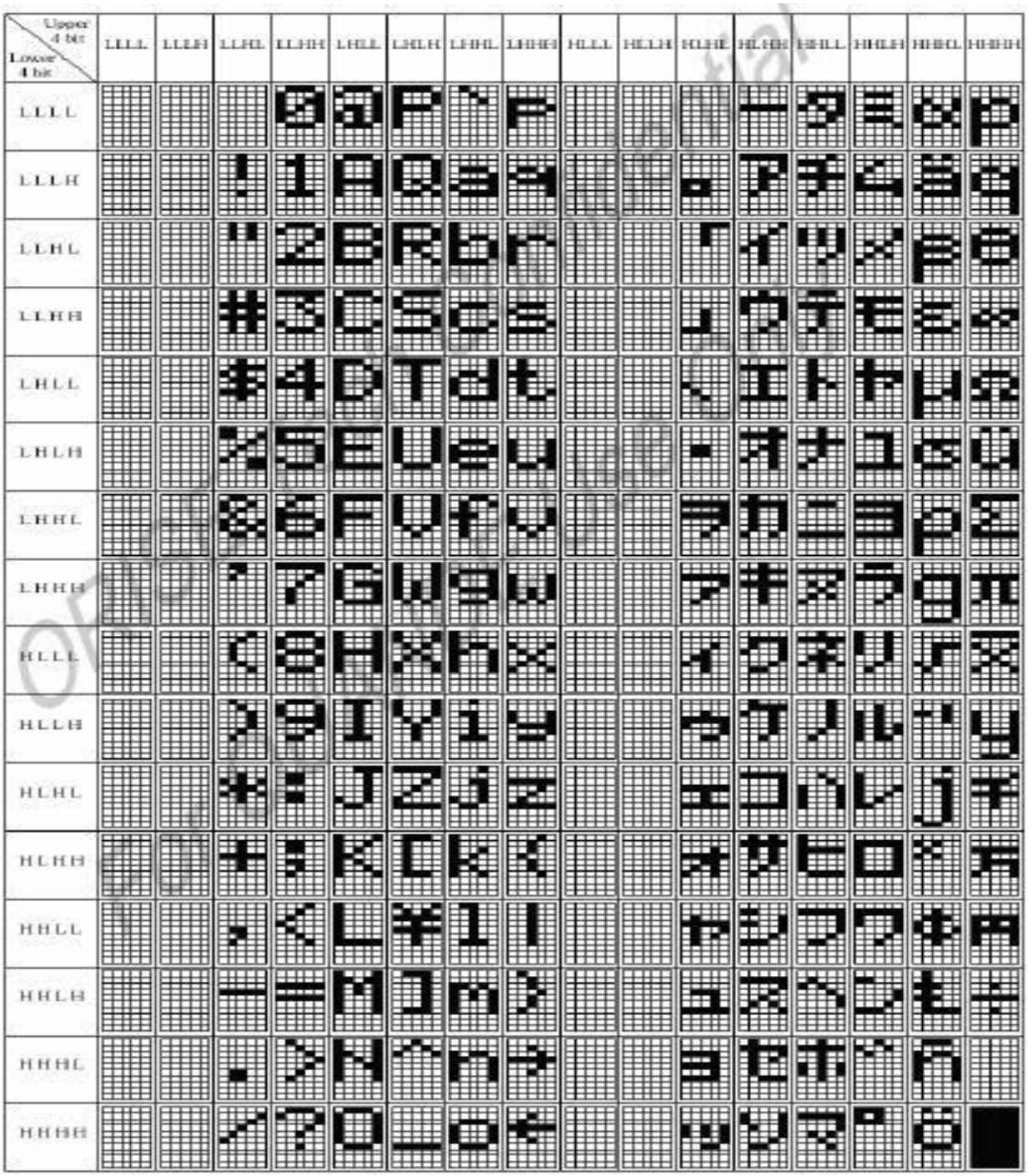

2.6 Inspection Specification

◆Inspection Standard : MIL-STD-105E Table Normal Inspection Single Sampling Level Ⅱ .

◆Equipment : Gauge、MIL-STD、Powertip Tester、Sample

◆Defect Level : Major Defect AQL 0.4; Minor Defect AQL 1.5 .

◆OUT Going Defect Level : Sampling .

◆Manner of appearance test :

(1). The test be under 40W×2 fluorescent light ' and distance of view must be at 30 cm.

(2). The test direction is base on about around 45° of vertical line. (Fig. 1)

(3). Definition of area . (Fig. 2)

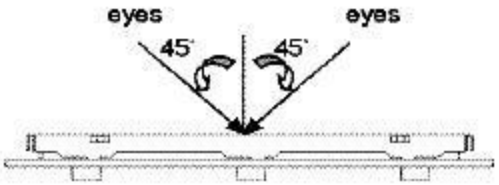

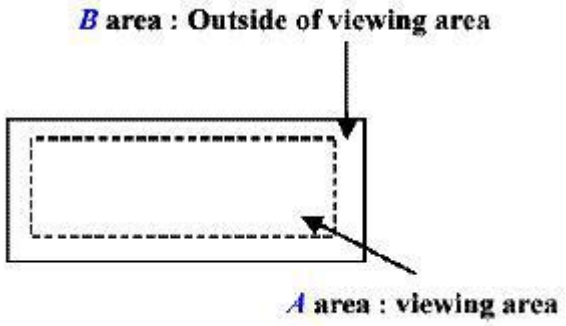

◆ Specification:

NO	Item	Criterion	level
01	Product condition	1.1 The part number is inconsistent with work order of Production.	Major
		1.2 Mixed production types.	Major
		1.3 Assembled in inverse direction.	Major
02	Quantity	2.1 The quantity is inconsistent with work order of production.	Major
03	Outline dimension	3.1 Product dimension and structure must conform to Structure diagram.	Major
04	Electrical Testing	4.1 Missing line character、dot and icon.	Major
		4.2 No function or no display.	Major
		4.3 Output data is error.	Major
		4.4 LCD viewing angle defect.	Major
		4.5 Current consumption exceeds product specifications.	Major
05	Black or white dot、scratch、contamination Round type	5.1 Round type: 5.1.1 display only : ・White and black spots on display ≦ 0.25mm, no more than Four white or black spots present. ・Densely spaced : NO more than two spots or lines within	Minor

		3mm	

◆Specification :

NO	Item	Criterion	level
05	Black or white dot、scratch、contamination Round type 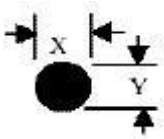 Φ=(x+y)/2 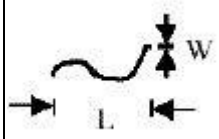 	5.1.2 Nom-display : Dimension (diameter : Φ) Acceptance(Q'ty) Φ≦0.20mm Accept no dense 0.10mm＜Φ≦0.20mm 3 0.20mm＜Φ≦0.25mm 2 Total 4 5.1.3 Line type: Dimension (diameter : Φ) Acceptance (Q'ty) Length width A area B area --- w≦0.03mm Accept no dense Don't count L≦3.0mm 0.03mm＜ [illegible] 4 Don't count L≦2.5mm 0.05mm＜ [illegible] Don't count --- w＞0.075mm As round type	Minor

06	Polarizer Bubble	Dimension (diameter : Φ) Acceptance(Q'ty) A area B area Φ≦0.20mm Accept no dense Don't count 0.20mm＜Φ≦0.50mm 3 Don't count 0.50mm＜ Φ≦1.00mm 2 Don't count Φ＞1.00mm 0 Don't count Total quantity 4 Don't count	Minor
07	The crack of glass	● Glass Crack: 7.1 Crack on the circuit of electrode terminal :  X Y Z Front X≦¼a Y≦½D Z≦t Back Neglect	Minor

◆Specification :

NO	Item	Criterion	Level
07	The crack of glass X: The length of Crack Y: The width of crack Z: The thickness of crack D: terminal length T: The thickness of glass A : The length of glass	⬬ Glass Crack: 7.2 General glass crack and corner edge: 7.2.1 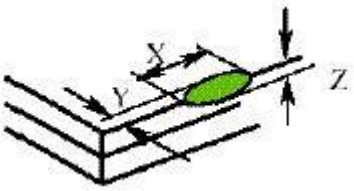 X Y Z Neglect Out A area Neglect 7.2.2 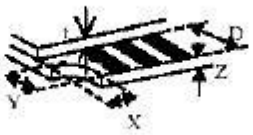 X Y Z Neglect Out A area Neglect	Minor
		7.3 Glass remain: 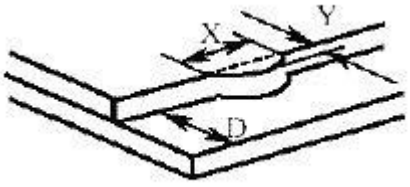 X Y Neglect ≦ 1/3 d	Minor

◆Specification :

NO	Item	Criterion	Level
07	The crack of glass X: The length of Crack Y: The width of crack Z: The thickness of crack D: terminal length T: The thickness of glass A : The length of glass	7.4 Corner crack and medial crack: 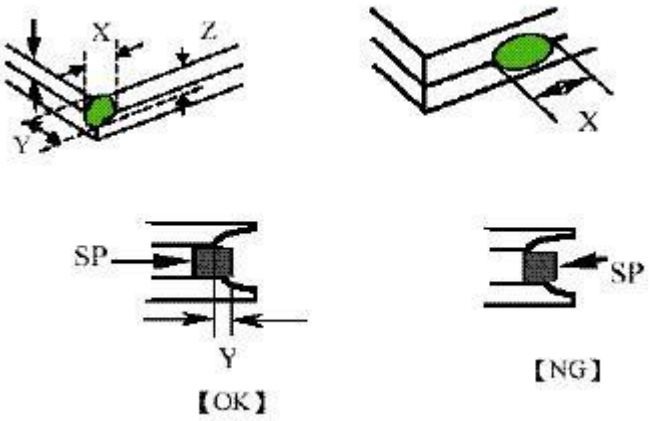 X Y Z ≦1/5a Crack can't enter viewing area ≦1/2t ≦1/5a Crack can't exceed the half of width of SP width of SP 1/2t<Z≦2t	Minor
08	Backlight elements	8.1 Backlight can't work normally.	Major
		8.2 Backlight doesn't light or color is wrong.	Major
		8.3 Illumination source flickers when lit.	Major
09	General appearance	9.1 pin type must match type in specification sheet	Major
		9.2 No short circuits in components on PCB or FPC	Major
		9.3Product packaging must the same as specified on packaging specification sheet.	Major
		9.4 The folding and peeled off in polarizer are not acceptable	Major
		9.5 The PCB or FPC between B/L assembled distance (PCB or FPC) is ≦1.5mm	Major