Specification Sheet

Model No. : HSM16032B

Description : 160*32 STN LCD Module ,Backlight Color Option , AIP31066 Controller,Wide Temp, Popular Size.

RECORDS OF REVISION

Date	Rev.	Description	Page	Design by
2011/8/22	0	New Sample.	-	-
			-	-

Contents

1. SPECIFICATIONS
   - 1.1 Features
   - 1.2 Mechanical Specifications
   - 1.3 Absolute Maximum Ratings
   - 1.4 Backlight & LED Characteristics

2. MODULE STRUCTURE
   - 2.1 Counter Drawing
   - 2.2 Interface Pin Description
   - 2.3 Timing Characteristics
   - 2.4 Instruction Table
   - 2.5 Inspection Specification

1. SPECIFICATIONS

1.1 Features

Item	Standard Value
Display Type	160 x 32 DOTS
Driver Condition	LCD Module : 1/32 Duty , 1/5 Bias
Viewing Direction	6 O'clock
Interface	8BIT bus MPU interface
Driver IC	AIP31020

1.2 Mechanical Specifications

Item	Standard Value	Unit
Outline Dimension	122(L) *44(W) * Max 13.3 (T)	mm
Viewing Area	99(L) * 24(W)	mm
Dot Size (W*H)	0.51*0.52mm	
Dot Pitch (W*H)	0.56*0.57 mm	

HSM16032B Series Table

No.	Part Number	LCD Type	Backlight Color	Graphic & Font Color	Background Color
1	HSM16032B-B	STN,Blue,Negative, Transmissive	White	White	Blue
2	HSM16032B-Y	STN,Yellow-Green, Positive, Transflective	Yellow-Green	Black	Yellow-Green
3	HSM16032BG	STN,Gray,Positive, Transflective	White	Dark-Blue	Gray
4	HSM16032B-G-W	FSTN,Gray,Positive, Transflective	White	Black	Gray
5	HSM16032B-G-O	FSTN,Gray,Positive, Transflective	Orange	Black	Orange
6	HSM16032B-G-R	FSTN,Gray,Positive, Transflective	Red	Black	Red

1.3 Absolute Maximum Ratings

Item	Symbol	Condition	Min.	Max.	Unit
System Power Supply Voltage	VDD	-	-0.3	5.5	V
LCD Driver Supply Voltage	$VOUT_{IN}$	-	4.8	5.0	V
Input Voltage	V_{IN}	-	-0.3	VDD + 0.2	V
Operating Temperature	T_{OP}	-	-20	70	°C
Storage Temperature	T_{ST}	-	-30	80	°C
Storage Humidity	H_D	Ta < 40 °C	20	80	%RH

1.4 Backlight Characteristics

LCD Module with LED Backlight

Electrical / Optical Characteristics

Ta =25℃

Item	Symbol	Conditions	Min.	Typ.	Max.	Unit
Forward Voltage	Vf	If=30mA	3.0	3.1	3.2	V
Reverse Current	Ir	If=5v			--	uA
Average Brightness	IV	If=30mA				cd/m^2
Wavelength (Without LCD)	λ d	If=30mA	--	--	--	nm
Luminous Intensity (without LCD)	Lv Sub	If=30mA				cd/m^2
Uniformity	Δ%	IvMin / IvMax *100%	--	-	-	%
Color	WHITE					

2. MODULE STRUCTURE

2.1 Counter Drawing

2.1.1 LCM Mechanical Diagram

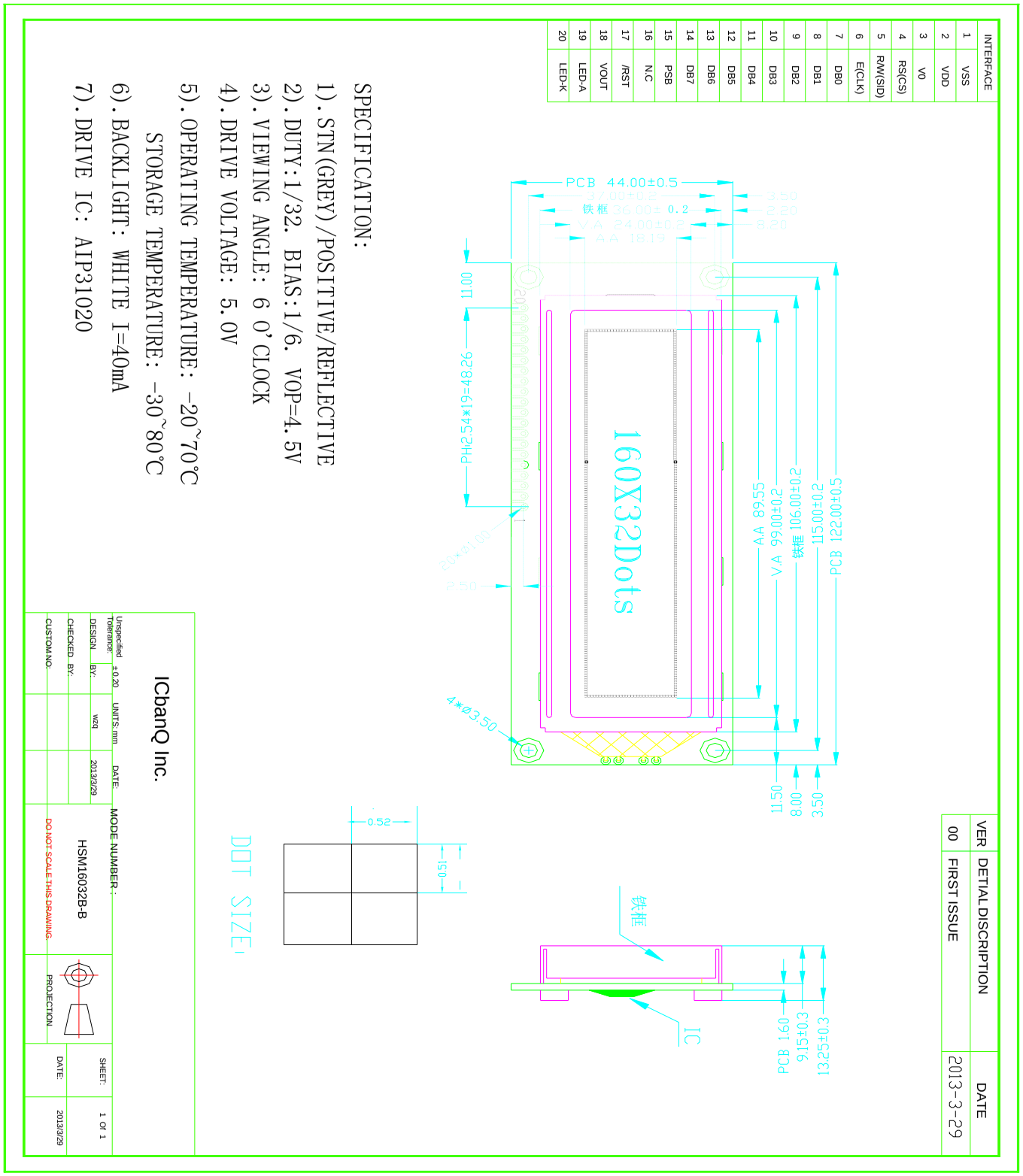

2.2 Interface Pin Description

Pin No.	Symbol	Function
1	VSS	Ground (0V)
2	VDD	Power supply input for driver IC (+5V)
3	VO	LCD driver supply voltages, Contrast Adjust
4	RS	Register select input pin: RS = "H": DB0 to DB7 are display data RS = "L": DB0 to DB7 are control data
5	RW	Read write control 0:write 1:read
6	E	IC Enable trigger
7--14	DB0~DB7	data bus data
15	PSB	Interface selection:0:serial mode 1:8/4-bits parallel bus mode
16	N.C	No used
17	/RES	Reset signal
18	VOUT	No used
19	LED+	BACKLIGHT+ （5V）
20	LED-	BACKLIGHT- （0V）

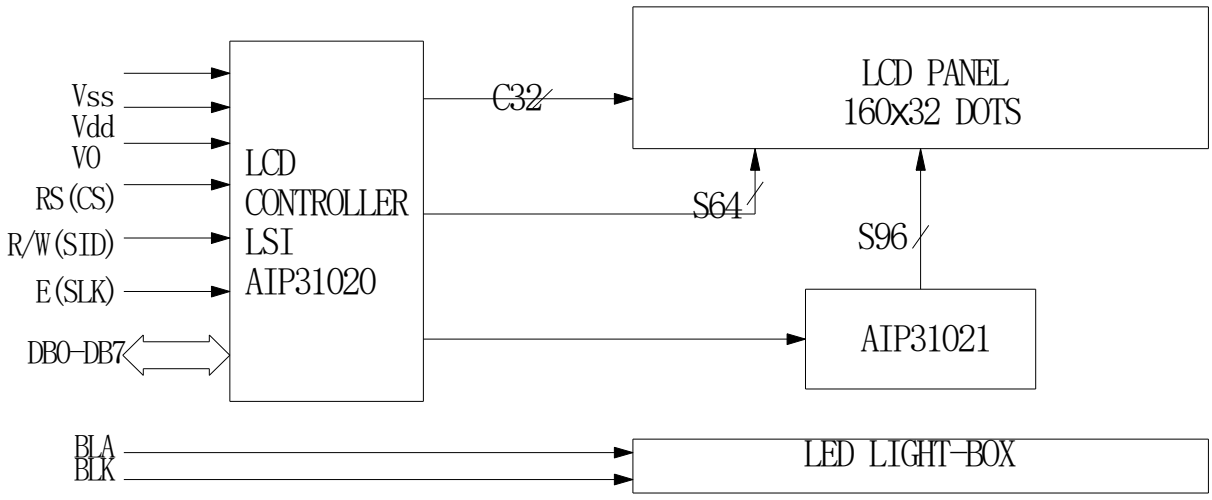

2.3 Timing Characteristics

AC Characteristics ($T_A = 25^0C$, $V_{DD} = 4.5V$) Parallel Mode Interface

Symbol	Characteristics	Test Condition	Min.	Typ.	Max.	Unit
		Internal Clock Operation				
f_{OSC}	OSC Frequency	R = 33KΩ	480	540	600	KHz
		External Clock Operation				
f_{EX}	External Frequency	-	480	540	600	KHz
	Duty Cycle	-	45	50	55	%
T_R, T_F	Rise/Fall Time	-	-	-	0.2	µs
		Write Mode (Writing data from MPU to ST7920)				
T_C	Enable Cycle Time	Pin E	1200	-	-	ns
T_{PW}	Enable Pulse Width	Pin E	140	-	-	ns
T_R, T_F	Enable Rise/Fall Time	Pin E	-	-	25	ns
T_{AS}	Address Setup Time	Pins: RS,RW,E	10	-	-	ns
T_{AH}	Address Hold Time	Pins: RS,RW,E	20	-	-	ns
T_{DSW}	Data Setup Time	Pins: DB0 - DB7	40	-	-	ns
T_H	Data Hold Time	Pins: DB0 - DB7	20	-	-	ns
		Read Mode (Reading Data from ST7920 to MPU)				
T_C	Enable Cycle Time	Pin E	1200	-	-	ns
T_{PW}	Enable Pulse Width	Pin E	140	-	-	ns
T_R, T_F	Enable Rise/Fall Time	Pin E	-	-	25	ns
T_{AS}	Address Setup Time	Pins: RS,RW,E	10	-	-	ns
T_{AH}	Address Hold Time	Pins: RS,RW,E	20	-	-	ns
T_{DDR}	Data Delay Time	Pins: DB0 - DB7	-	-	100	ns
T_H	Data Hold Time	Pins: DB0 - DB7	20	-	-	ns
		Interface Mode with LCD Driver(ST7921)				
T_{CWH}	Clock Pulse with High	Pins: CL1, CL2	800	-	-	ns
T_{CWL}	Clock Pulse with Low	Pins: CL1, CL2	800	-	-	ns
T_{CST}	Clock Setup Time	Pins: CL1, CL2	500	-	-	ns
T_{SU}	Data Setup Time	Pin: D	300	-	-	ns
T_{DH}	Data Hold Time	Pin: D	300	-	-	ns
T_{DM}	M Delay Time	Pin: M	-1000	-	1000	ns

DC Characteristics ($T_A = 25^oC$, $V_{DD} = 4.5\ V - 5.5\ V$)

Symbol	Characteristics	Test Condition	Min.	Typ.	Max.	Unit
V_{DD}	Operating Voltage	-	4.5	-	5.5	V
V_{LCD}	LCD Voltage	$V0-V_{SS}$	3.0	-	7	V
I_{CC}	Power Supply Current	f_{OSC} = 540KHz, V_{DD}=5V Rf=33KΩ	-	0.45	0.75	mA
V_{IH1}	Input High Voltage (Except OSC1)	-	$0.7V_{DD}$	-	V_{DD}	V
V_{IL1}	Input Low Voltage (Except OSC1)	-	-0.3	-	0.6	V
V_{IH2}	Input High Voltage (OSC1)	-	V_{DD}-1	-	V_{DD}	V
V_{IL2}	Input Low Voltage (OSC1)	-	-	-	1.0	V
V_{OH1}	Output High Voltage (DB0 - DB7)	I_{OH} = -0.1mA	$0.8V_{DD}$	-	V_{DD}	V
V_{OL1}	Output Low Voltage (DB0 - DB7)	I_{OL} = 0.1mA	-	-	0.4	V
V_{OH2}	Output High Voltage (Except DB0 - DB7)	I_{OH} = -0.04mA	$0.8V_{DD}$	-	V_{DD}	V
V_{OL2}	Output Low Voltage (Except DB0 - DB7)	I_{OL} = 0.04mA	-	-	$0.1V_{DD}$	V
I_{LEAK}	Input Leakage Current	V_{IN} = 0V to V_{DD}	-1	-	1	µA
I_{PUP}	Pull Up MOS Current	V_{DD} = 5V	75	80	85	µA

8 bit interface timing diagram

- **MPU write data to ST7920**

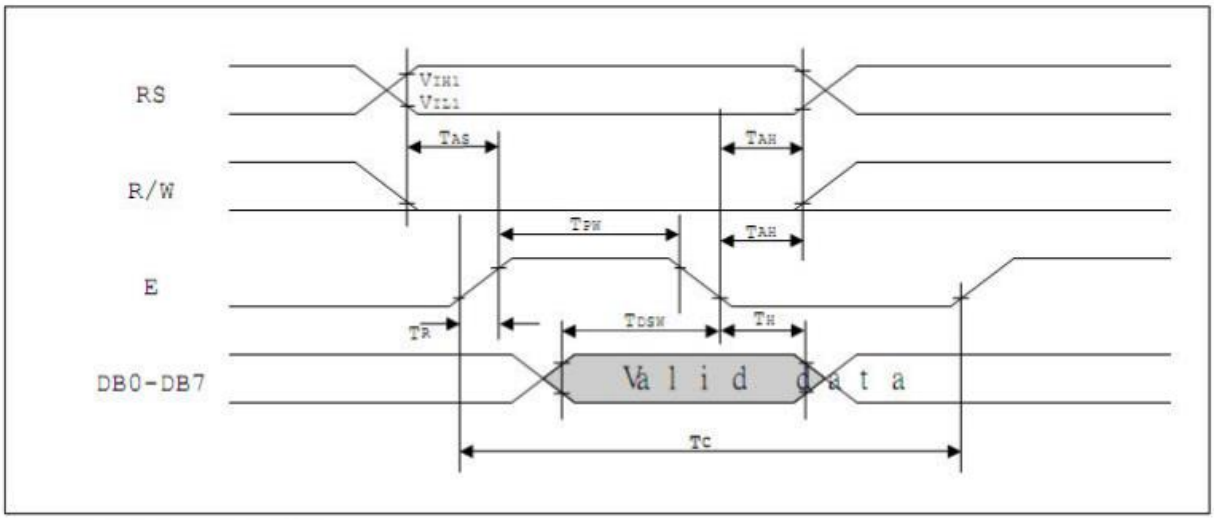

- **MPU read data from ST7920**

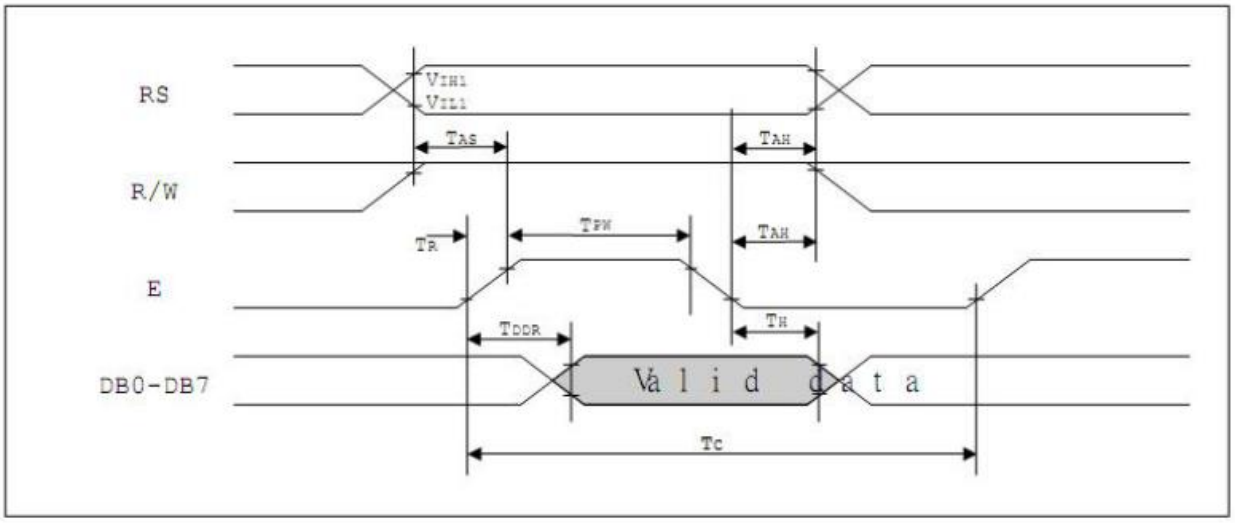

Serial interface timing diagram

- **MPU write data to ST7920**

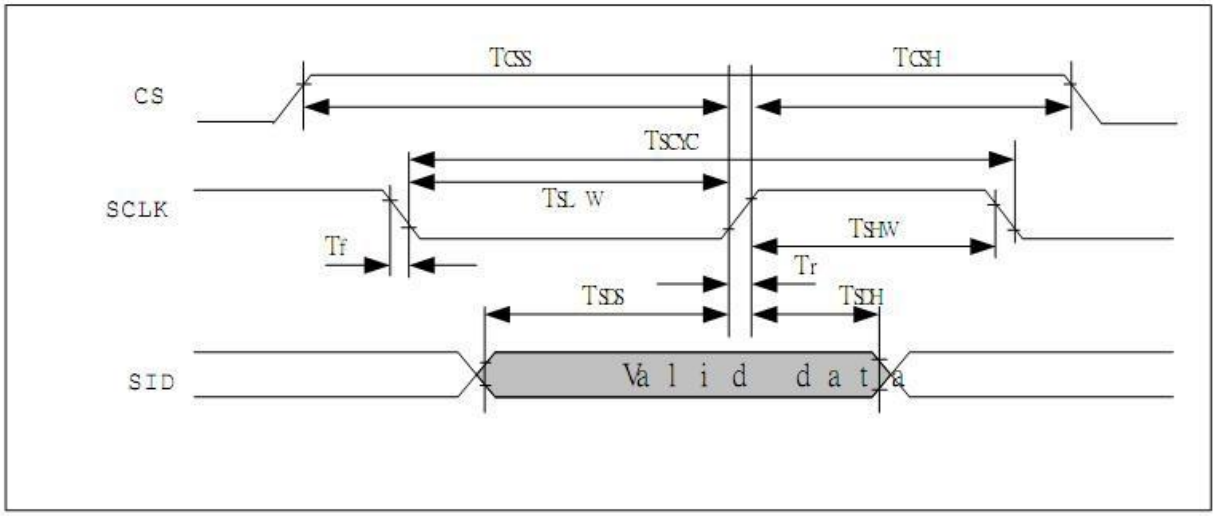

External reset timing

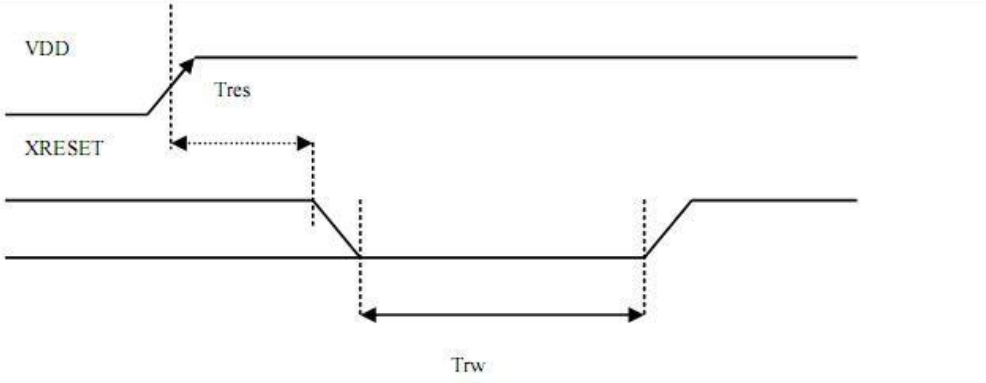

XRESET pulse width	Trw	10us
RESET start time	Tres	50ns

2.4 Instruction Table

Instruction set 1: (RE=0: basic instruction)

Ins	code										Description	Exec time (540KHZ)
	RS	RW	DB7	DB6	DB5	DB4	DB3	DB2	DB1	DB0		
CLEAR	0	0	0	0	0	0	0	0	0	1	Fill DDRAM with "20H", and set DDRAM address counter （AC）to "00H"	1.6 ms
HOME	0	0	0	0	0	0	0	0	1	X	Set DDRAM address counter（AC）to "00H", and put cursor to origin ；the content of DDRAM are not changed	72us
ENTRY MODE	0	0	0	0	0	0	0	1	I/D	S	Set cursor position and display shift when doing write or read operation	72us
DISPLAY ON/OFF	0	0	0	0	0	0	1	D	C	B	D=1: display ON C=1: cursor ON B=1: blink ON	72 us
CURSOR DISPLAY CONTROL	0	0	0	0	0	1	S/C	R/L	X	X	Cursor position and display shift control ：the content of DDRAM are not changed	72 us
FUNCTION SET	0	0	0	0	1	DL	X	0 RE	X	X	DL=1 8-BIT interface DL=0 4-BIT interface **RE=1: extended instruction** **RE=0: basic instruction**	72 us
SET CGRAM ADDR.	0	0	0	1	AC5	AC4	AC3	AC2	AC1	AC0	Set CGRAM address to address counter（AC） **Make sure that in extended instruction SR=0 (scroll or RAM address select)**	72 us
SET DDRAM ADDR.	0	0	1	0 AC6	AC5	AC4	AC3	AC2	AC1	AC0	Set DDRAM address to address counter（AC） AC6 is fixed to 0	72 us
READ BUSY FLAG（BF）& ADDR.	0	1	BF	AC6	AC5	AC4	AC3	AC2	AC1	AC0	Read busy flag（BF）for completion of internal operation, also Read out the value of address counter（AC）	0 us
WRITE RAM	1	0	D7	D6	D5	D4	D3	D2	D1	D0	Write data to internal RAM (DDRAM/CGRAM/IRAM/GDRAM)	72 us
READ RAM	1	1	D7	D6	D5	D4	D3	D2	D1	D0	Read data from internal RAM (DDRAM/CGRAM/IRAM/GDRAM)	72 us

Instruction set 2: (RE=1: extended instruction)

Inst.	code										description	Exec. time (540KHZ)
	RS	RW	DB7	DB6	DB5	DB4	DB3	DB2	DB1	DB0		
STAND BY	0	0	0	0	0	0	0	0	0	1	Enter stand by mode, any other instruction can terminate (Com1..32 halted, only Com33 ICON can display)	72 us
SCROLL or RAM ADDR. SELECT	0	0	0	0	0	0	0	0	1	SR	SR=1: enable vertical scroll position SR=0: enable IRAM address **(extended instruction)** SR=0: enable CGRAM address**(basic instruction)**	72 us
REVERSE	0	0	0	0	0	0	0	1	R1	R0	Select 1 out of 4 line (in DDRAM) and decide whether to reverse the display by toggling this instruction **R1,R0 initial value is 00**	72 us
EXTENDED FUNCTION SET	0	0	0	0	1	DL	X	1 RE	G	0	DL=1 8-BIT interface DL=0 4-BIT interface **RE=1: extended instruction set** **RE=0: basic instruction set** G=1 :graphic display ON G=0 :graphic display OFF	72 us
SET IRAM or SCROLL ADDR	0	0	0	1	AC5	AC4	AC3	AC2	AC1	AC0	SR=1: AC5~AC0 the address of vertical scroll SR=0: AC3~AC0 the address of ICON RAM	72 us
SET GRAPHIC RAM ADDR.	0	0	1	0 0	0 AC5	0 AC4	AC3 AC3	AC2 AC2	AC1 AC1	AC0 AC0	Set GDRAM address to address counter（AC） First set vertical address and the horizontal address by consecutive writing Vertical address range AC5...AC0 Horizontal address range AC3... AC0	72 us

2.5 Inspection Specification

◆Inspection Standard : MIL-STD-105E Table Normal Inspection Single Sampling Level Ⅱ .

◆Equipment : Gauge、MIL-STD、Powertip Tester、Sample

◆Defect Level : Major Defect AQL 0.4; Minor Defect AQL 1.5 .

◆OUT Going Defect Level : Sampling .

◆Manner of appearance test :

(1). The test be under 40W×2 fluorescent light ' and distance of view must be at 30 cm.

(2). The test direction is base on about around 45° of vertical line. (Fig. 1)

(3). Definition of area . (Fig. 2)

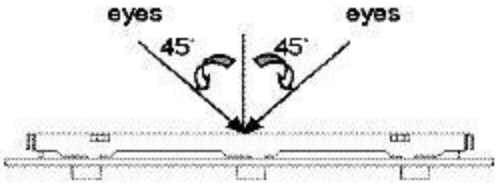

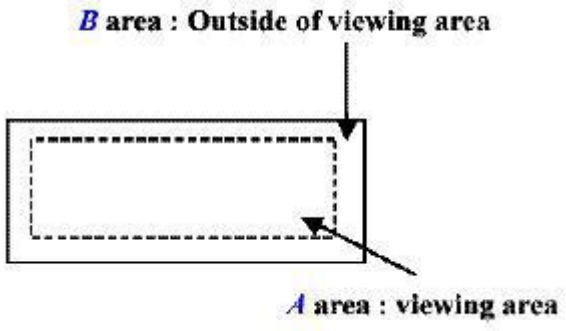

◆ Specification:

NO	Item	Criterion	level
01	Product condition	1.1 The part number is inconsistent with work order of Production.	Major
		1.2 Mixed production types.	Major
		1.3 Assembled in inverse direction.	Major
02	Quantity	2.1 The quantity is inconsistent with work order of production.	Major
03	Outline dimension	3.1 Product dimension and structure must conform to Structure diagram.	Major
04	Electrical Testing	4.1 Missing line character、dot and icon.	Major
		4.2 No function or no display.	Major
		4.3 Output data is error.	Major
		4.4 LCD viewing angle defect.	Major
		4.5 Current consumption exceeds product specifications.	Major
05	Black or white dot、scratch、contamination Round type	5.1 Round type: 5.1.1 display only : ・White and black spots on display ≦ 0.25mm, no more than Four white or black spots present. ・Densely spaced : NO more than two spots or lines within 3mm	Minor

◆Specification :

NO	Item	Criterion	level

05	Black or white dot、scratch、contamination Round type 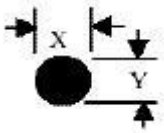 Φ=(x+y)/2 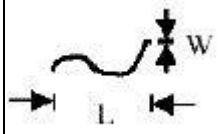 	5.1.2 Nom-display : Dimension (diameter : Φ) Acceptance(Q'ty) Φ≦0.10mm Accept no dense 0.10mm＜Φ≦0.20mm 3 0.20mm＜Φ≦0.25mm 2 Total 4 5.1.3 Line type: Dimension (diameter : Φ) Acceptance (Q'ty) Length width A area B area --- w≦0.03mm Accept no dense Don't count L≦3.0mm 0.03mm＜ [illegible] 4 Don't count L≦2.5mm 0.05mm＜ [illegible] Don't count --- w＞0.075mm As round type	Minor

06	Polarizer Bubble	Dimension (diameter : Φ) Acceptance(Q'ty) A area B area Φ≦0.20mm Accept no dense Don't count 0.20mm＜Φ≦0.50mm 3 Don't count 0.50mm＜Φ≦1.00mm 2 Don't count Φ＞1.00mm 0 Don't count Total quantity 4 Don't count	Minor
07	The crack of glass	● Glass Crack: 7.1 Crack on the circuit of electrode terminal : 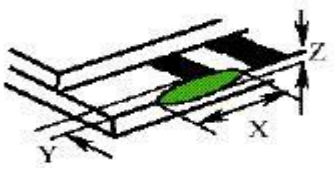 X Y Z Front X≦1/5a Y≦1/2D Z≦t Back Neglect	Minor

◆Specification :

NO	Item	Criterion	Level
07	The crack of glass X: The length of Crack Y: The width of crack Z: The thickness of crack D: terminal length T: The thickness of glass A : The length of glass	⬬Glass Crack: 7.2 General glass crack and corner edge: 7.2.1 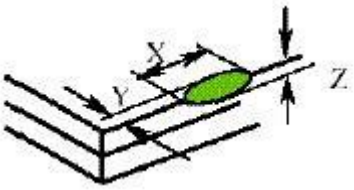 X Y Z Neglect Out A area Neglect 7.2.2 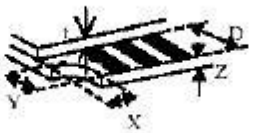 X Y Z Neglect Out A area Neglect	Minor
		7.3 Glass remain: 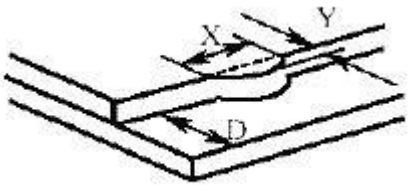 X Y Neglect ≦ 1/3 d	Minor

◆Specification :

NO	Item	Criterion	Level
07	The crack of glass X: The length of Crack Y: The width of crack Z: The thickness of crack D: terminal length T: The thickness of glass A : The length of glass	7.4 Corner crack and medial crack: 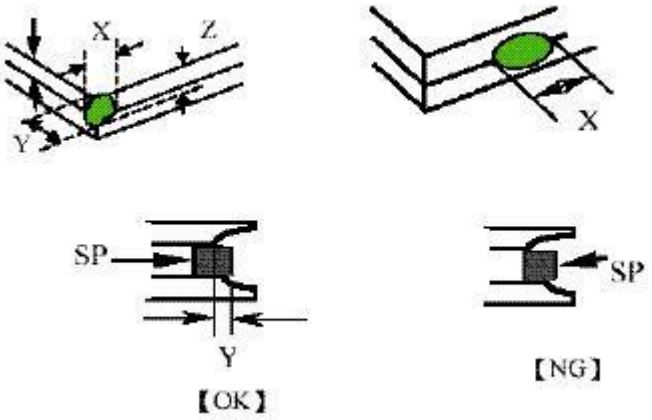 X Y Z ≦1/5a Crack can't enter viewing area ≦1/2t ≦1/5a Crack can't exceed the half of width of SP width of SP 1/2t<Z≦2t	Minor
08	Backlight elements	8.1 Backlight can't work normally.	Major
		8.2 Backlight doesn't light or color is wrong.	Major
		8.3 Illumination source flickers when lit.	Major
09	General appearance	9.1 pin type must match type in specification sheet	Major
		9.2 No short circuits in components on PCB or FPC	Major
		9.3Product packaging must the same as specified on packaging specification sheet.	Major
		9.4 The folding and peeled off in polarizer are not acceptable	Major
		9.5 The PCB or FPC between B/L assembled distance (PCB or FPC) is ≦1.5mm	Major