Specification Sheet

Model No. : HSM12232B

Description : 122*32 STN LCD Module ,Backlight Color Option , AIP31066 Controller,Wide Temp,Popular Size.

RECORDS OF REVISION

Date	Rev.	Description	Page	Design by
2011/9/11	0	New Sample.	-	-
			-	-

Contents

1. SPECIFICATIONS
   - 1.1 Features
   - 1.2 Mechanical Specifications
   - 1.3 Absolute Maximum Ratings
   - 1.4 Backlight & LED Characteristics

2. MODULE STRUCTURE
   - 2.1 Counter Drawing
   - 2.2 Interface Pin Description
   - 2.3 Timing Characteristics
   - 2.4 Instruction Table
   - 2.5 Inspection Specification

1. SPECIFICATIONS

1.1 Features

Item	Standard Value
Display Type	122 x 32 DOTS
Driver Condition	LCD Module : 1/32 Duty , 1/5 Bias
Viewing Direction	6 O'clock
Interface	8BIT bus MPU interface
Driver IC	AIP31520 or eqv

1.2 Mechanical Specifications

Item	Standard Value	Unit
Outline Dimension	84(L) *44(W) * 12.8(T)	mm
Viewing Area	60(L) * 18(W)	mm
Dot Size (W*H)	0.36*0.42mm	
Dot Pitch (W*H)	0.40*0.46 mm	

HSM12232B Series Table

No.	Part Number	LCD Type	Backlight Color	Graphic & Font Color	Background Color
1	HSM12232B-B	STN,Blue,Negative, Transmissive	White	White	Blue
2	HSM12232B-Y	STN,Yellow-Green, Positive, Transflective	Yellow-Green	Black	Yellow-Green
3	HSM12232B-G	STN,Gray,Positive, Transflective	White	Dark-Blue	Gray
4	HSM12232B-G-W	FSTN,Gray,Positive, Transflective	White	Black	Gray
5	HSM12232B-G-O	FSTN,Gray,Positive, Transflective	Orange	Black	Orange
6	HSM12232B-G-R	FSTN,Gray,Positive, Transflective	Red	Black	Red

1.3 Absolute Maximum Ratings

Item	Symbol	Condition	Min.	Max.	Unit
System Power Supply Voltage	VDD	-	-0.3	6.0	V
LCD Driver Supply Voltage	$VOUT_{IN}$	-	4.5	5.5	V
Input Voltage	V_{IN}	-	-0.3	VDD + 0.2	V
Operating Temperature	T_{OP}	-	-20	70	°C
Storage Temperature	T_{ST}	-	-30	80	°C
Storage Humidity	H_D	Ta < 40 °C	20	90	%RH

1.4 Backlight Characteristics

LCD Module with LED Backlight

Electrical / Optical Characteristics

Ta =25℃

Item	Symbol	Conditions	Min.	Typ.	Max.	Unit
Forward Voltage	Vf	If=20mA	3.0	3.1	3.2	V
Reverse Current	Ir	If=5v			--	uA
Average Brightness	IV	If=20mA				cd/m^2
Wavelength (Without LCD)	λ d	If=20mA	--	--	--	nm
Luminous Intensity (without LCD)	Lv Sub	If=20mA				cd/m^2
Uniformity	Δ%	IvMin / IvMax *100%	--	-	-	%
Color	WHITE					

2. MODULE STRUCTURE

2.1 Counter Drawing

2.1.1 LCM Mechanical Diagram

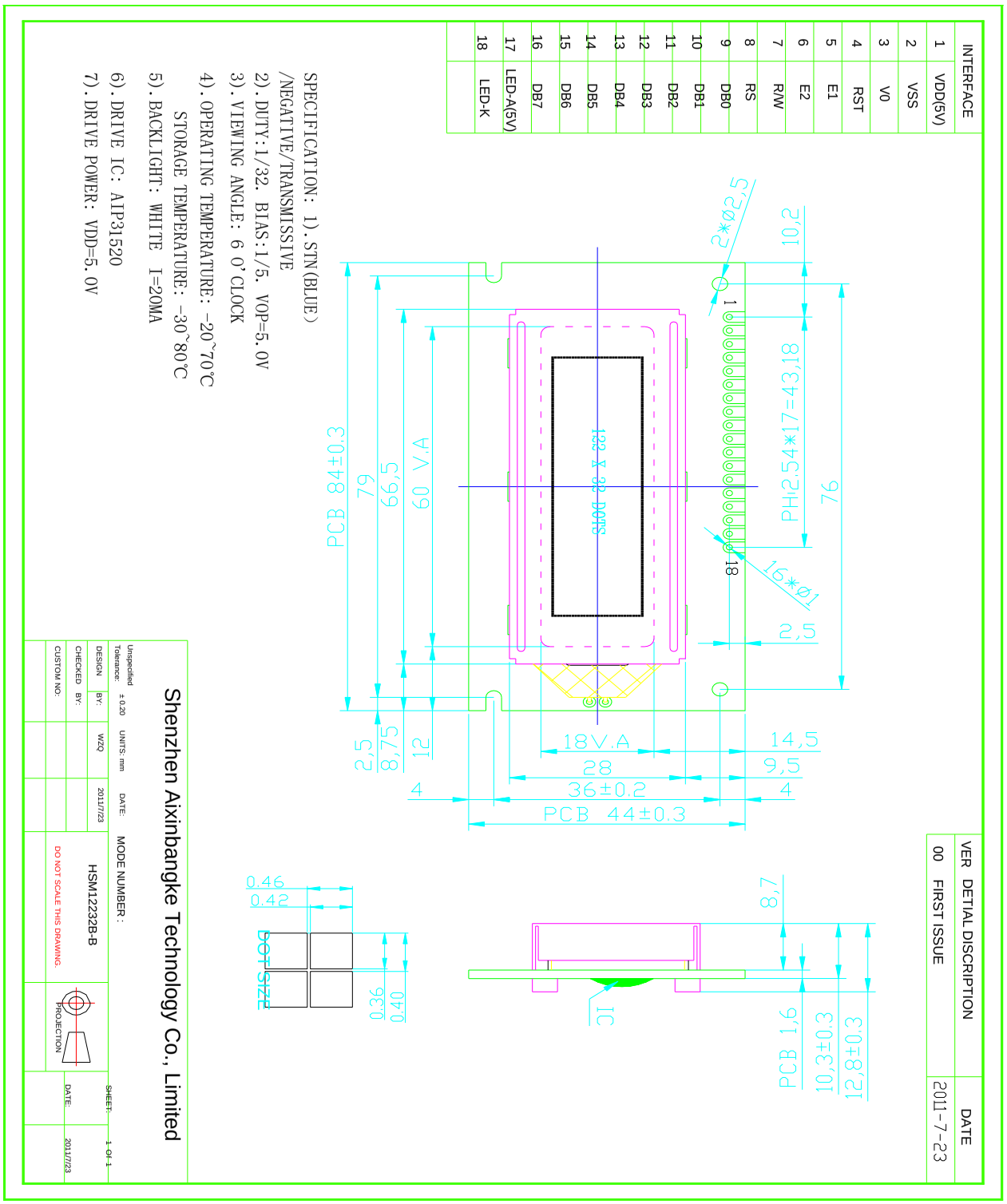

2.2 Interface Pin Description

Pin No.	Symbol	Function
1	VDD	Power supply input for driver IC (+5V)
2	VSS	Ground (0V)
3	VO	LCD driver supply voltages,Contrast Adjust
4	RST	Reset signal
5	E1	Enable signal IC1(U1)
6	E2	Enable signal IC2(U2)
7	RW	Read write control 0:write 1:read
8	RS	0:DB0-DB7= Command 1: DB0-DB7= Data
9-16	DB0~DB7	data bus for 8 bit interface
17	LED+	BACKLIGHT+ （5V）
18	LED-	BACKLIGHT- （0V）

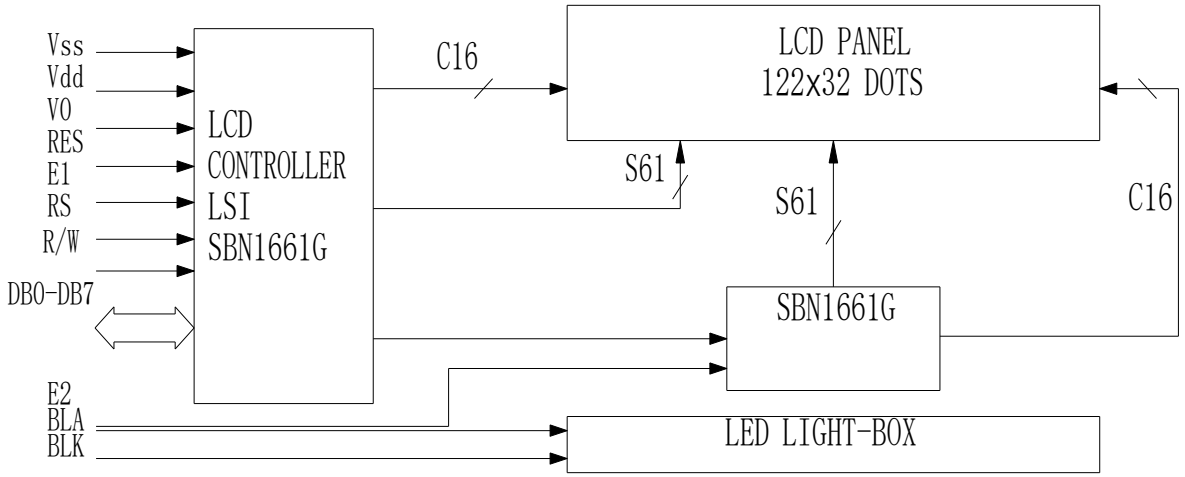

2.3 Timing Characteristics

Table 42 AC timing for interface with a 80-type microcontorller at V_{DD}=5 volts

V_{DD} = 5 V ±10%; V_{SS} = 0 V; T_{amb} = -20 °C to +75°C.

symbol	parameter	min.	max.	test conditons	unit
t_{AS}	Address set-up time	20			ns
t_{AH}	Address hold time	10			ns
t_F, t_R	Read/Write pulse falling/rising time		15		ns
t_{RWPW}	Read/Write pulse width	200			ns
t_{CYC}	System cycle time	1000			ns
t_{DS}	Data setup time	80			ns
t_{DH}	Data hold time	10			ns
t_{ACC}	Data READ access time		90	CL= 100 pF.	ns
t_{OH}	Data READ output hold time	10	60	Refer to Fig. 23.	ns

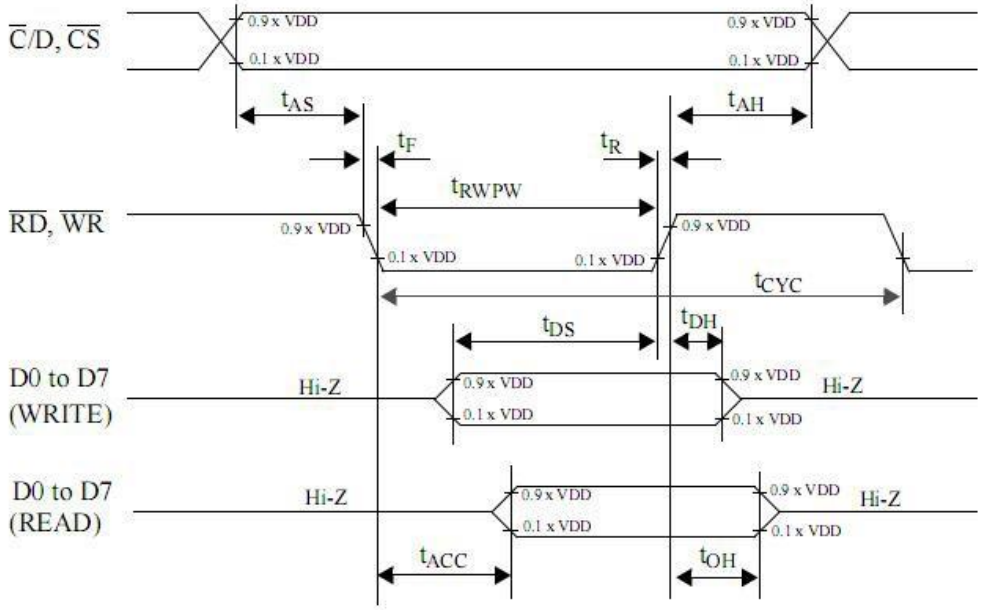

Fig.22 AC timing for interface with a 80-type microcontroller

Table 39 DC Characteristics

V_{DD} = 5 V ±10%; V_{SS} = 0 V; all voltages with respect to V_{SS}, unless otherwise specified; T_{amb} = −20 to +75 °C.

SYMBOL	PARAMETER	CONDITIONS	MIN.	TYP.	MAX.	UNIT
V_{DD}	Supply voltage for logic		4.5	5.0	5.5	V
V_{LCD}	LCD bias voltage V_{LCD}= V_{DD}-V5				13	V
V_{IL}	LOW level input voltage	For all inputs	0		0.8	V
V_{IH}	HIGH level input voltage	For all inputs	V_{DD}-1.2		V_{DD}	V
V_{OL}	LOW level output voltage	For all outputs	0.0		0.3	V
V_{OH}	HIGH level output voltage	For all outputs	V_{DD} - 0.3		V_{DD}	V
I_{STBY}	Standby current at V_5=-5 volts	Note 1			3.0	µA
$I_{DD(1)}$	Operating current at V_5=-5 volts and f_{CL}=2KHz, V_{LCD}=10 volts	Note 2 & Note 3		2.7	5.6	µA
$I_{DD(2)}$	Operating current at V_5=-5 volts and Rf=1 MΩ, V_{LCD}=10 volts			12.3	15.6	µA
$I_{DD(3)}$	Operating current at V_5=-5 volts and f_{CL}=21.8 KHz, V_{LCD}=10 volts			5.3	10.8	µA
$I_{DD(4)}$	Operating current at V_5=-5 volts and t_{CYC}=100 KHz, V_{LCD}=10 volts	Note 4		21.7	26.2	µA
$f_{osc(VDD=5V)}$, $f_{osc(VDD=3V)}$	Please refer to Table 37, On-chip RC oscillator characteristics.					
C_{in}	Input capacitance of all input pins			5.0	8.0	pF
R_{ON}	LCD driver ON resistance	Note 5		5.0	7.5	KΩ
t_R	Reset time	Note 6	1.0			µS

Display Data Memory Page and the Page Address Register

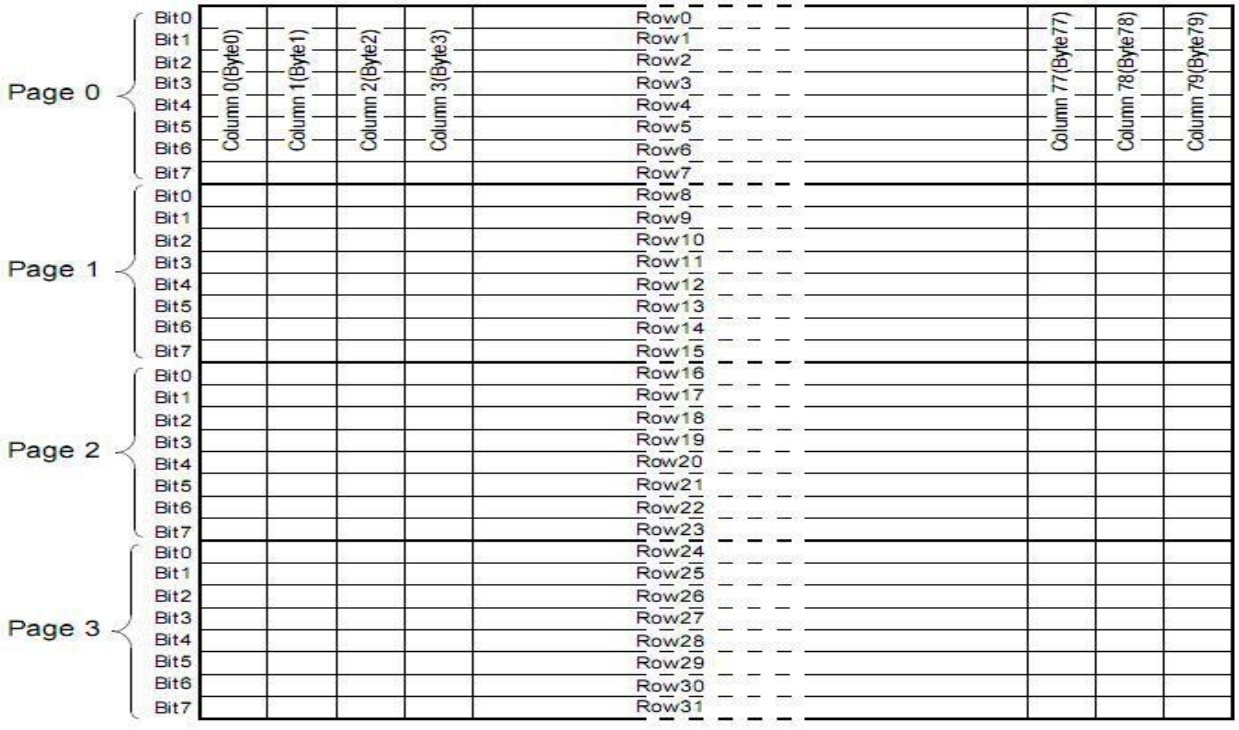

Fig.12 Page/Column allocation of the Display Data Memory

2.4 Instruction Table

	Command	Code											Function	
		A0	$\overline{RD}$	$\overline{WR}$	D7	D6	D5	D4	D3	D2	D1	D0		
(1)	Display ON/OFF	0	1	0	1	0	1	0	1	1	1	0/1	Turns all display on or off, independently of display RAM data or internal status. 1: ON 0: OFF (Power-saving mode with static drive on)*	
(2)	Display start line	0	1	0	1	1	0	Display Start Address (0–31)					Specifies RAM line corresponding to uppermost line (COM0) of display.	
(3)	Set page address	0	1	0	1	0	1	1	1	0	Page (0–3)		Sets display RAM page in page address register.	
(4)	Set column (segment) address	0	1	0	0	Column Address (0–79)							Sets display RAM column address in column address register.	
(5)	Read status	0	0	1	Busy	ADC	ON/OFF	RESET	0	0	0	0	Reads the following status: BUSY 1: Internal operation, 0: Ready ADC 1: CW output (forward), 0: CCW output (reverse) ON/OFF 1: Display off, 0: Display on RESET 1: Being reset, 0: Normal	
(6)	Write display data	1	1	0	Write Data								Writes data from data bus into display RAM.	Display RAM location whose address has been preset is accessed. After access, the column address is incremented by 1.
(7)	Read display data	1	0	1	Read Data								Reads data from display RAM onto data bus.	
(8)	Select ADC	0	1	0	1	0	1	0	0	0	0	0/1	Used to invert relationship of assignment between display RAM column addresses and segment driver outputs. 0: CW output (forward) 1: CCW output (reverse)	
(9)	Static drive ON/OFF	0	1	0	1	0	1	0	0	1	0	0/1	Selects normal display or static driving operation. 1: Static drive (power-saving mode) 0: Normal driving	
(10)	Select duty	0	1	0	1	0	1	0	1	0	0	0/1	Selects LCD cell driving duty. 1: 1/32 0: 1/16	
(11)	Read modify write	0	1	0	1	1	1	0	0	0	0	0	Increments column address counter by 1 when display data is written. (This is not done when data is read.)	
(12)	End	0	1	0	1	1	1	0	1	1	1	0	Clears read modify write mode.	
(13)	Reset	0	1	0	1	1	1	0	0	0	1	0	Sets display start line register on the first line. Also sets column address counter and page address counter to 0.	

2.5 Inspection Specification

◆Inspection Standard : MIL-STD-105E Table Normal Inspection Single Sampling Level Ⅱ .

◆Equipment : Gauge、MIL-STD、Powertip Tester、Sample

◆Defect Level : Major Defect AQL 0.4; Minor Defect AQL 1.5 .

◆OUT Going Defect Level : Sampling .

◆Manner of appearance test :

(1). The test be under 40W×2 fluorescent light ' and distance of view must be at 30 cm.

(2). The test direction is base on about around 45° of vertical line. (Fig. 1)

(3). Definition of area . (Fig. 2)

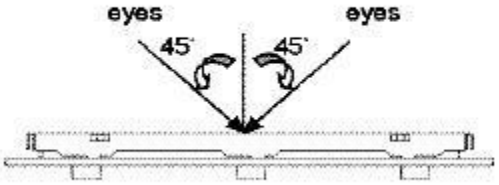

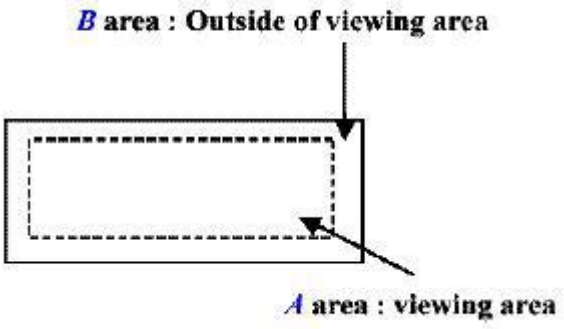

◆ Specification:

NO	Item	Criterion	level
01	Product condition	1.1 The part number is inconsistent with work order of Production.	Major
		1.2 Mixed production types.	Major
		1.3 Assembled in inverse direction.	Major
02	Quantity	2.1 The quantity is inconsistent with work order of production.	Major
03	Outline dimension	3.1 Product dimension and structure must conform to Structure diagram.	Major
04	Electrical Testing	4.1 Missing line character、dot and icon.	Major
		4.2 No function or no display.	Major
		4.3 Output data is error.	Major
		4.4 LCD viewing angle defect.	Major
		4.5 Current consumption exceeds product specifications.	Major
05	Black or white dot、scratch、contamination Round type	5.1 Round type: 5.1.1 display only : ・White and black spots on display ≦ 0.25mm, no more than Four white or black spots present. ・Densely spaced : NO more than two spots or lines within 3mm	Minor

◆Specification :

NO	Item	Criterion	level
05	Black or white dot、scratch、contamination Round type 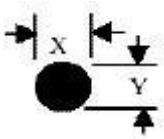 Φ=(x+y)/2  	5.1.2 Nom-display : Dimension (diameter : Φ) Acceptance(Q'ty) Φ≦0.10mm Accept no dense 0.10mm＜Φ≦0.20mm 3 0.20mm＜Φ≦0.25mm 2 Total 4 5.1.3 Line type: Dimension (diameter : Φ) Acceptance (Q'ty) Length width A area B area --- w≦0.03mm Accept no dense Don't count L≦3.0mm 0.03mm＜ [illegible] 4 Don't count L≦2.5mm 0.05mm＜ [illegible] Don't count --- w＞0.075mm As round type	Minor

06	Polarizer Bubble	Dimension (diameter : Φ) Acceptance(Q'ty) A area B area Φ≦0.20mm Accept no dense Don't count 0.20mm＜Φ≦0.50mm 3 Don't count 0.50mm＜Φ≦1.00mm 2 Don't count Φ＞1.00mm 0 Don't count Total quantity 4 Don't count	Minor
07	The crack of glass	● Glass Crack: 7.1 Crack on the circuit of electrode terminal : 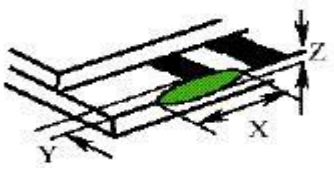 X Y Z Front X≦1.5a Y≦1/2D Z≦t Back Neglect	Minor

◆Specification :

NO	Item	Criterion	Level
07	The crack of glass X: The length of Crack Y: The width of crack Z: The thickness of crack D: terminal length T: The thickness of glass A : The length of glass	⬬Glass Crack: 7.2 General glass crack and corner edge: 7.2.1 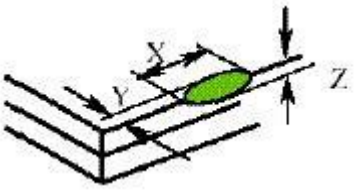 X Y Z Neglect Out A area Neglect 7.2.2 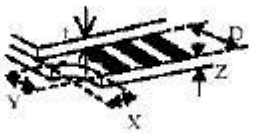 X Y Z Neglect Out A area Neglect	Minor
		7.3 Glass remain: 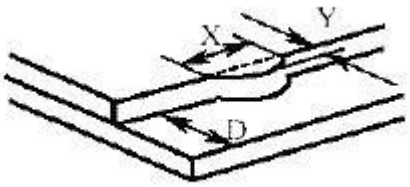 X Y Neglect ≦ 1/3 d	Minor

◆Specification :

NO	Item	Criterion	Level
07	The crack of glass X: The length of Crack Y: The width of crack Z: The thickness of crack D: terminal length T: The thickness of glass A : The length of glass	7.4 Corner crack and medial crack: 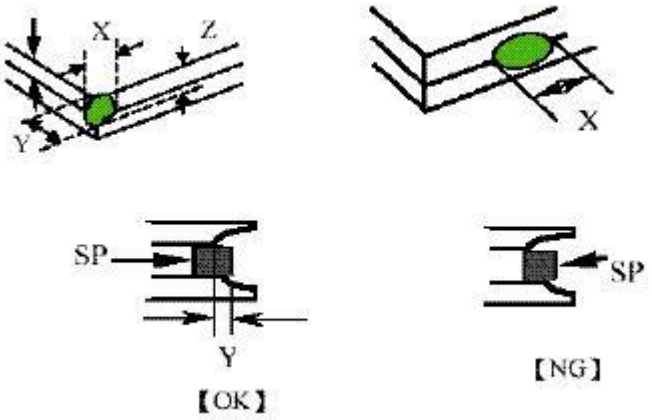 X Y Z ≦1/5a Crack can't enter viewing area ≦1/2t ≦1/5a Crack can't exceed the half of width of SP width of SP 1/2t<Z≦2t	Minor
08	Backlight elements	8.1 Backlight can't work normally.	Major
		8.2 Backlight doesn't light or color is wrong.	Major
		8.3 Illumination source flickers when lit.	Major
09	General appearance	9.1 pin type must match type in specification sheet	Major
		9.2 No short circuits in components on PCB or FPC	Major
		9.3Product packaging must the same as specified on packaging specification sheet.	Major
		9.4 The folding and peeled off in polarizer are not acceptable	Major
		9.5 The PCB or FPC between B/L assembled distance (PCB or FPC) is ≦1.5mm	Major